Order No. GMAC0507058C3

Service Manual

Air Conditioner

CS-XA9DKD
CU-XA9DKD
CS-XA12DKD
CU-XA12DKD

⚠ WARNING

This service information is designed for experienced repair technicians only and is not designed for use by the general public. It does not contain warnings or cautions to advise non-techical individuals of potential dangers in attempting to service a product. Products powered by electricity should be serviced or repaired only by experienced professional technicians. Any attempt to service or repair the product or products dealt with in this service information by anyone else could result in serious injury or death.

CONTENTS

Panasonic®

1 Features

- High Efficiency
- Oxygen mode to enrich oxygen in the room
- Auto Restart Control
  Automatically restart after power failure
- Comfort Environment
- Prevent compressor reverse cycle
- Removable and washable front panel
- 12-hour Timer Setting
- Deodorization control.

2 Functions

Remote Control

⏻ OFF/ON

Operation START/STOP

- Turn on/off the air conditionor
- When stop the operation by pressing OFF/ON button,the cursor key "▬" points to OFF .

MODE

Operation Mode Selection

- **AUTO** Automatic Mode Operation
- **HEAT** Cooling Mode Operation
- **COOL** Soft Dry Mode Operation
- **DRY** Air Circulation Mode Operation

FAN SPEED

Indoor Fan Speed Selection

- ▬ Low Speed
- ▬▬▬ Medium Speed
- ▬▬▬▬▬ High Speed
- **AUTO** Automatic Speed

AIR SWING

Vertical Airflow Direction Control

- **AUTO** Automatic Vertical Airflow Control
- Manual Control

TEMP

Room Temperature Setting

- Heating, Coolling, Soft Dry Operation

  Temperature Setting(16℃ to 30℃)
- Auto Operation

  ▲STD Operation with 2℃ higher than standard temperature.

  STD Operation with standard temperature.

  ▼STD Operation with 2℃ lower than standard temperature.

O2

Oxygen Mode operation OFF/ON

ON TIMER OFFTIMER

Timer Operation Selection

- 12-hour Timer Setting

  (set the ON/OFF Timer hourly later)

TIMER SELECT/ CANCEL

Set /Cancel Timer Operation

- On timer and OFF Timer setting and cancellation

RESET

Reset point

• Press with a pin to clear the memory data.

Indoor Unit

Auto Switch Button

Power Switch ON/OFF

- When the remote control cannot be used or for repairing and testing ,please use this button.

Signal Receiving Sound Control

- Keep pressing this button for 10seconds to turn on or turn off the signal receiving sound.

Operation Indication Lamps

- Power (Green) ..... Lights up in operation; Blinks within 20 seconds during Auto Operation Mode judging.
- O_2 AIR (Green) ..... Lights up in Oxygen mode operation
- TIMER (Orange) ..... Lights up in Timer operation

Operation Mode

- Heating/Cooling/Soft Dry /Auto Operation

Time Delay Safety Control

- The unit will restart operation in 3-4 minutes after each pause.

7-Minutes Time Save Control

- 7-minutes automatic restarting at Cooling Operation

Anti-freezing Control for the Evaporator

- Cooling or Soft Dry Operation

Oxygen Operation

- To supply oxygen enrich air

Warm Booting Control

- Indoor fan starts running when temperature of evaporator reaches 30℃ or above.
- When temperature of evaporator is between 30℃ and 34℃,indoor fan will run at Super Low or Low speed.
- When temperature of evaporator reaches 34℃, Warm Booting Operation ends.

Indoor Fan Speed Control

- High, Med, Low
- Auto Fan Speed

Airflow Direction Control

- Vertical airflow
  The louver automatically swings up and down or can be manual adjusted by remote control
- Horizontal airflow
  The louver can be manually adjusted by hand.

Delayed On-timer Control

- For cooling or soft dry mode, the unit starts 15 minutes before the set time with the remote control.

Outdoor Unit

Anti-reverse Protection

- To protect the compressor from reverse rotation when power off suddenly.

Overload Protector

- The 2-step Overload Protector will trip to protect the compressor when
  1)Temperature of compressor reaches 140

  2)High temperature or current enters into the compressor

60-seconds Test Operation Control

- Once the compressor is activated, it does not stop within 60 seconds. It stops immediately with remote control stop signal by pressing OFF/ON button.

Deicing Control

- Anti-freezing operation for outdoor unit (during Heating Mode Operation only)
- Temperature of the condenser is tested by TRS.

4-way Valve Control

- If the unit is stopped during Heating Operation,the 4-way valve will remain in heating mode operation for 5 minutes.

3 Product Specifications

			Unit	CS-XA9DKD	CU-XA9DKD
Cooling Capacity			kW	2.70	
Heating Capacity			kW	3.10	
Moisture Removal			L /h	1.5	
Power Source			Phase V Cycle	Single 220 50	
Airflow Method			OUTLET INTAKE	SIDE VIEW 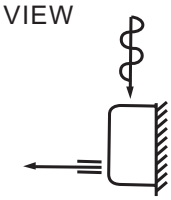	TOP VIEW 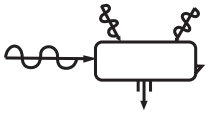
Air Circulation	Indoor Air (low)		m^3 /min	7.0	-
	Indoor Air (medium)		m^3 /min	8.0	-
	Indoor Air (high)		m^3 /min	9.7	-
	Outdoor Air		m^3 /min	-	-
Noise Level			dB(A)	Cooling:high38,Low30 Heating:high38,Low29	Cooling:high47 Heating:high48
Electrical Data	Input		W	Cooling:830 Heating:790	
	Running Current		A	Cooling:4.00 Heating:3.90	
	EER/COP		W/W	Cooling:3.25 Heating:3.92	
	Starting Current		A	20.2	
Piping Connection Port(Flare piping)			Inch Inch	G:half union3/8" L:half union1/4"	G:3-way valve3/8" L:2-way valve1/4"
Piping Size(Flare piping)			Inch Inch	G:gas side3/8" L:liquid side1/4"	G:gas side3/8" L:liquid side1/4"
Drain Hose	Inner Diameter		mm	14	-
	Length		m	0.65	-
Power Supply Cord Length (Number of core-wire)			m	1.3 3 core-wire/1.0mm^2	- -
Dimensions	Height		mm	280	540
	Width		mm	799	780
	Depth		mm	183	289
Net Weight			kg	9	34
Compressor	Type			-	Rotary(1 cylinder) Rolling piston type
	Motor Type			-	Induction(2 pole)
	Rated output		W	-	750
Air Circulation	type			Cross-flow fan	Propeller fan
	Motor type			Induction(4 pole)	Induction(6 pole)
	Input		W	37.4	58.4
	Rated Output		W	17	20
	Fan Speed	Low	rpm	920 60	-
		Med	rpm	1050 60	-
		High	rpm	1260 60	760 60

		Unit	CS-XA9DKD	CU-XA9DKD
Heat Exchanger	Description		Evaporator	Condenser
	Tube Material		Copper	Copper
	Fin Type		Slot type	Corrugation type
	Rows/Stage		(Plate fin configuration,forced draft) 2 x 15	2X24
	FPI		21	19
	Dimensions	mm	610x252x25.4	725.1 696 X504x36.38
Refrigerant Control Device			-	Capillary Tube
Refrigeration Oil		(c.c)	-	SUNISO 4GDID or ATMOS M60 or ATMOS 56M
Refrigerant (R410A)		g	-	1080(*)
Thermostat			Electronic Control	-
Protection Device			-	O.L.P.(230V,37A)
Capillary	Length	mm	-	815 10 630 20
	Circulation	L/min	-	10.4 0.2 11.7 0.2
	Inner Diameter	mm	-	1.5 1.5
Air Filter			P.P. Honeycomb	
Refrigerant Circulation Control Device			Capillary	
Compressor Capacitor		μF , V	-	30 μF , 370V
Fan Motor Capacitor		μF , V	1.5 μF , 400V	1.8μF , 440V

* 60g for air purging is not included.

● Specifications are subject to change without notice for further improvement.

			Unit	CS-XA12DKD	CU-XA12DKD
Cooling Capacity			kW	3.40	
Heating Capacity			kW	3.80	
Moisture Removal			L /h	1.8	
Power Source			Phase V Cycle	Single 220 50	
Airflow Method			OUTLET INTAKE	SIDE VIEW 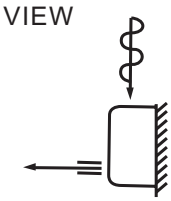	TOP VIEW 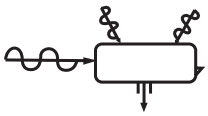
Air Circulation	Indoor Air (low)		m^3 /min	7.2	-
	Indoor Air (medium)		m^3 /min	8.0	-
	Indoor Air (high)		m^3 /min	9.3	-
	Outdoor Air		m^3 /min	-	-
Noise Level			dB(A)	Cooling:high39,Low32 Heating:high39,Low31	Cooling:high48 Heating:high48
Electrical Data	Input		W	Cooling:1.07k Heating:1.00k	
	Running Current		A	Cooling:4.90 Heating:4.80	
	EER/COP		W/W	Cooling:3.18 Heating:3.80	
	Starting Current		A	23.6	
Piping Connection Port(Flare piping)			Inch Inch	G:half union1/2” L:half union1/4"	G:3-way valve1/2” L:2-way valve1/4"
Piping Size(Flare piping)			Inch Inch	G:gas side3/8" L:liquid side1/4"	G:gas side3/8" L:liquid side1/4"
Drain Hose	Inner Diameter		mm	14	-
	Length		m	0.65	-
Power Supply Cord Length (Number of core-wire)			m	1.3 3 core-wire/1.0mm^2	- -
Dimensions	Height		mm	280	540
	Width		mm	799	780
	Depth		mm	183	289
Net Weight			kg	9	34
Compressor	Type			-	Rotary(1 cylinder) Rolling piston type
	Motor Type			-	Induction(2 pole)
	Rated output		W	-	900
Air Circulation	type			Cross-flow fan	Propeller fan
	Motor type			Induction(4 pole)	Induction(6 pole)
	Input		W	37.4	58.4
	Rated Output		W	18	20
	Fan Speed	Low	rpm	980 60	-
		Med	rpm	1090 60	-
		High	rpm	1260 60	760 60

		Unit	CS-XA12DKD	CU-XA12DKD
Heat Exchanger	Description		Evaporator	Condenser
	Tube Material		Copper	Copper
	Fin Type		Slot type	Corrugation type
	Rows/Stage		(Plate fin configuration,forced draft) 2 x 15	2X24
	FPI		21	21
	Dimensions	mm	610x252x25.4	725.1 696 X504x36.8
Refrigerant Control Device			-	Capillary Tube
Refrigeration Oil		(c.c)	-	SUNISO 4GDID or ATMOS M60 or ATMOS 56M
Refrigerant (R410A)		g	-	1050(*)
Thermostat			Electronic Control	O.L.P.(230V,30A)
Protection Device			-	
Capillary	Length	mm	-	545 10 609 20
	Circulation	L/min	-	12.5 0.2 10.0 0.2
	Inner Diameter	mm	-	1.5 1.4
Air Filter			P.P. Honeycomb	
Refrigerant Circulation Control Device			Capillary	
Compressor Capacitor		μF , V	-	30 μF , 370V
Fan Motor Capacitor		μF , V	1.5 μF , 400V	1.8μF , 440V

* 60g for air purging is not included.

● Specifications are subject to change without notice for further improvement.

4 Dimensions

Indoor Unit
CS-XA9DKD
CS-XA12DKD

Unit : mm

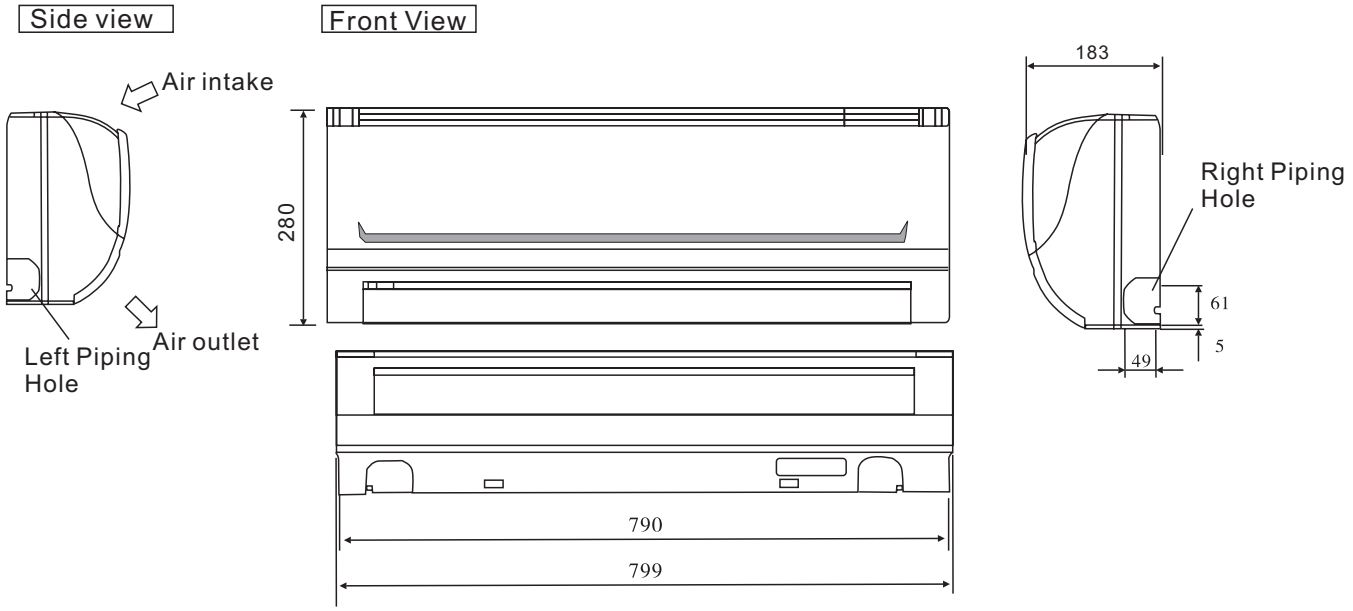

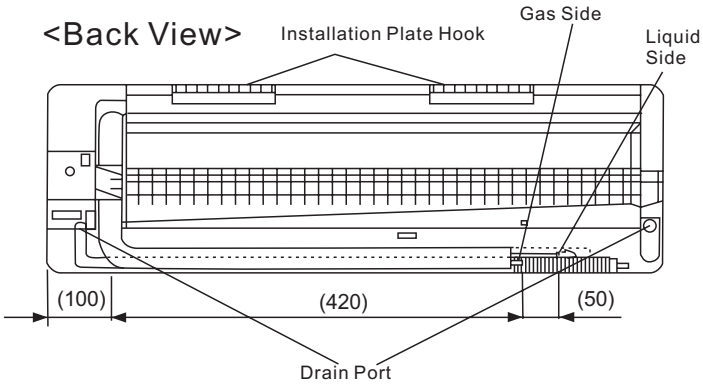

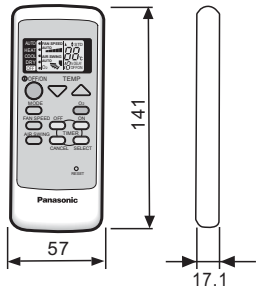

Installation plate (Front View)

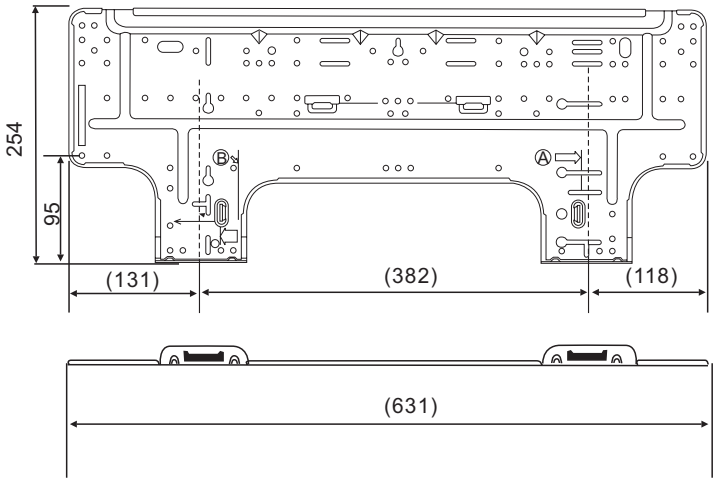

Outdoor Unit

Unit : mm

CU-XA9DKD
CU-XA12DKD

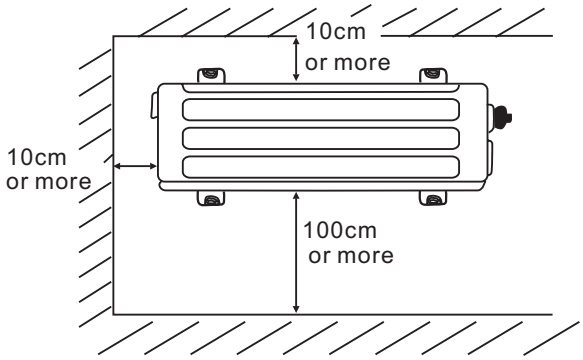

<Top View>

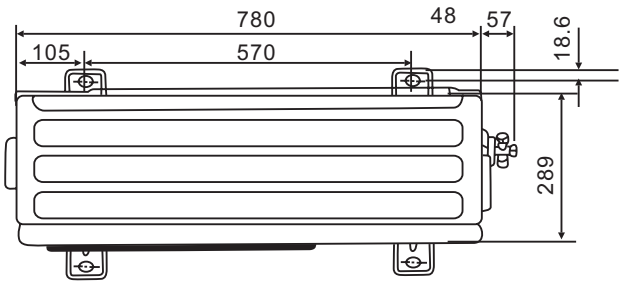

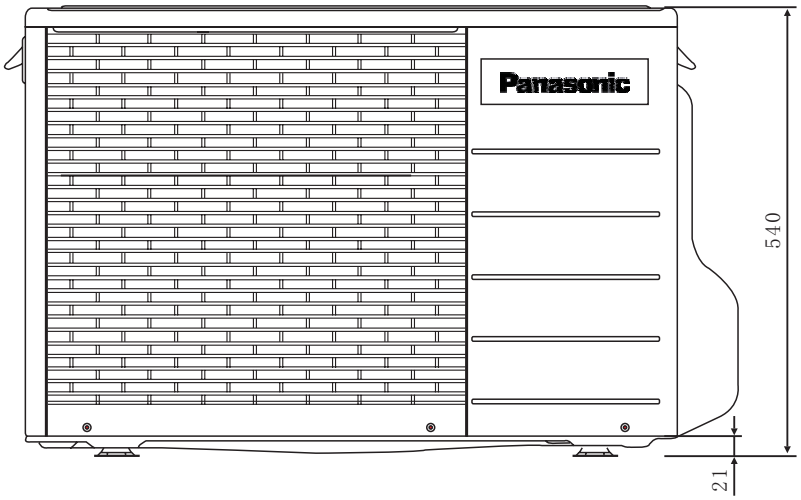

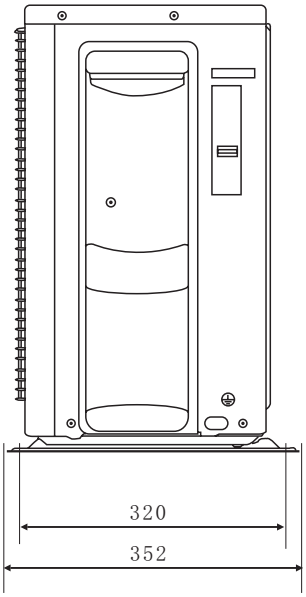

5 Refrigeration Cycle Diagram

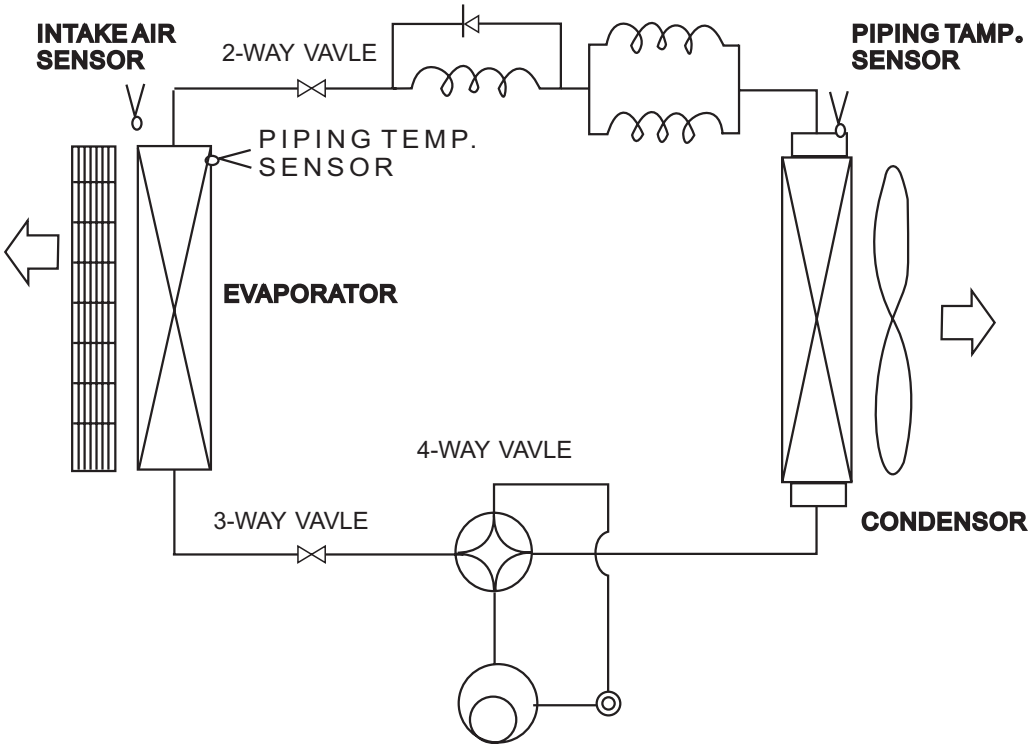

6 Block Diagram

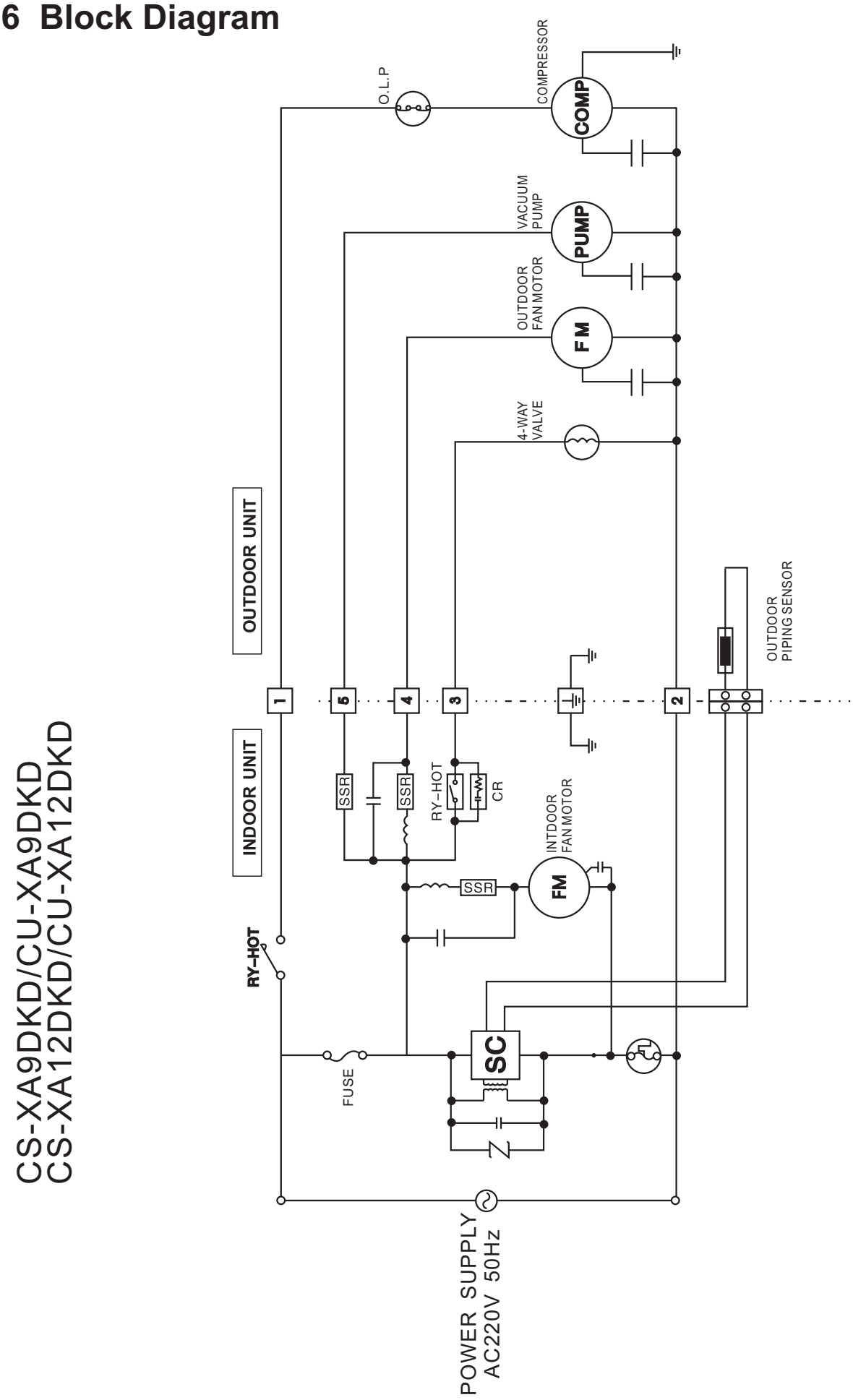

7 Wiring Diagram

CS-XA9DKD/CU-XA9DKD
CS-XA12DKD/CU-XA12DKD

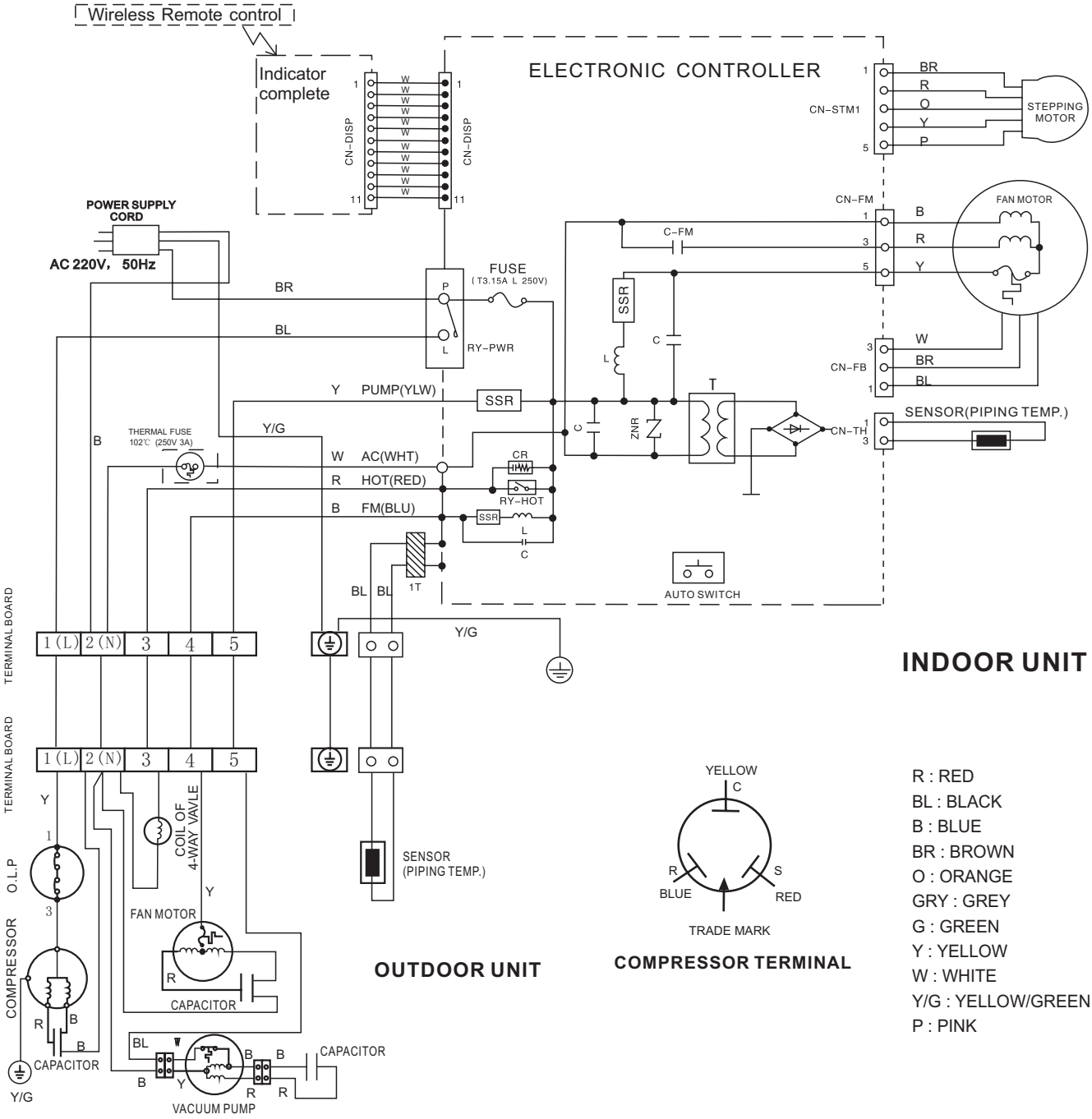

INDOOR FAN MOTOR RESISTANCE( )

	CS-XA9DKD	CS-XA12DKD
CONNECTING	CWA921116	CWA921116
Y-B (M)	331	331
Y-R (A)	312	312

OUTDOOR FAN MOTOR RESISTANCE( )

	CU-XA9DKD	CU-XA12DKD
CONNECTING	CWA951452	CWA951452
Y-B	272	272
Y-R	248	248

COMPRESSOR RESISTANCE( )

	CU-XA9DKD	CU-XA12DKD
CONNECTING	CWB092329	CWB092281
C - R	2.998	2.803
C - S	3.824	4.402

8 Operation Details

8.1 Cooling Mode Operation.

When selecting the Cooling Mode Operation, the unit will operate according to the setting by the Remote Controller or the control panel on the indoor unit and the operation is as the following.

Time Delay Safety Control

- 3 min.----If the compressor stops, it will not restart within 3 minutes.(Protection of compressor).

7 Minutes Time Save Control

- 7 min.----The unit will automatically operate in 7 minutes even if the room temperature is not reached. (Prevention of raising the humidity)

Anti-Freezing Control

- If temperature of evaporator is lower than 2℃ continuously for 4 minutes, the compressor will cease to prevent the evaporator from freezing. Fan speed setting will not be changed.
- When temperature of evaporator reaches 10℃,compressor will restart.

※ During Cooling Mode Operation, the Time Delay Safety Control is available.

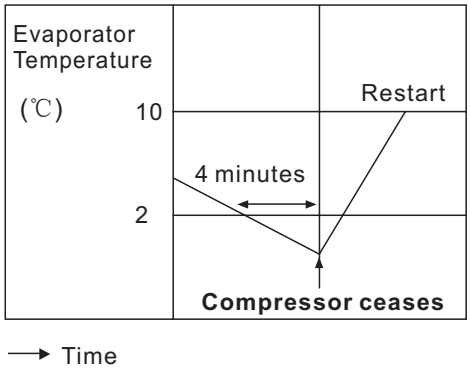

Compressor Reverse Rotation Protection Control

- If the compressor is operating continuously for 5 minutes and the temperature difference between in take air and indoor heat exchanger is 2.5 ℃or less for 3 minutes, compressor will stop and restart automatically. (Time Delay Safety Control is valid)

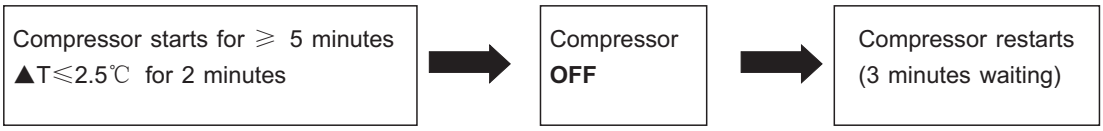

▲T= Intake air temperature - Indoor heat exchanger temperature

This is to protect reverse rotation of the compressor when there is a instantaneous power failure.

Automatic Fan Speed Mode

During Cooling Mode Operation, use remote controller to select Automatic Fan Speed.

- Deodorization control.

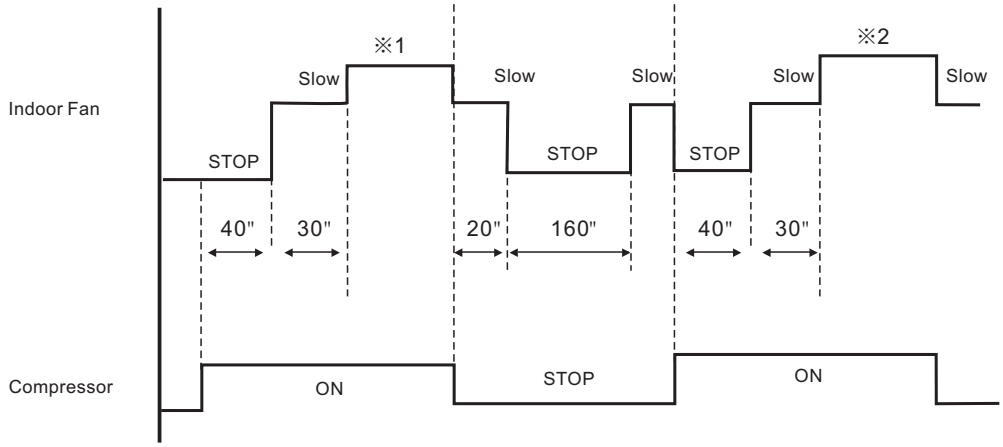

※ 1 Fan speed will be at "Hi" till the compressor ceases (set temperature reached).

※ 2 Fan speed will be at "Me" when the compressor restarts.

Time Graph for Cooling Operation

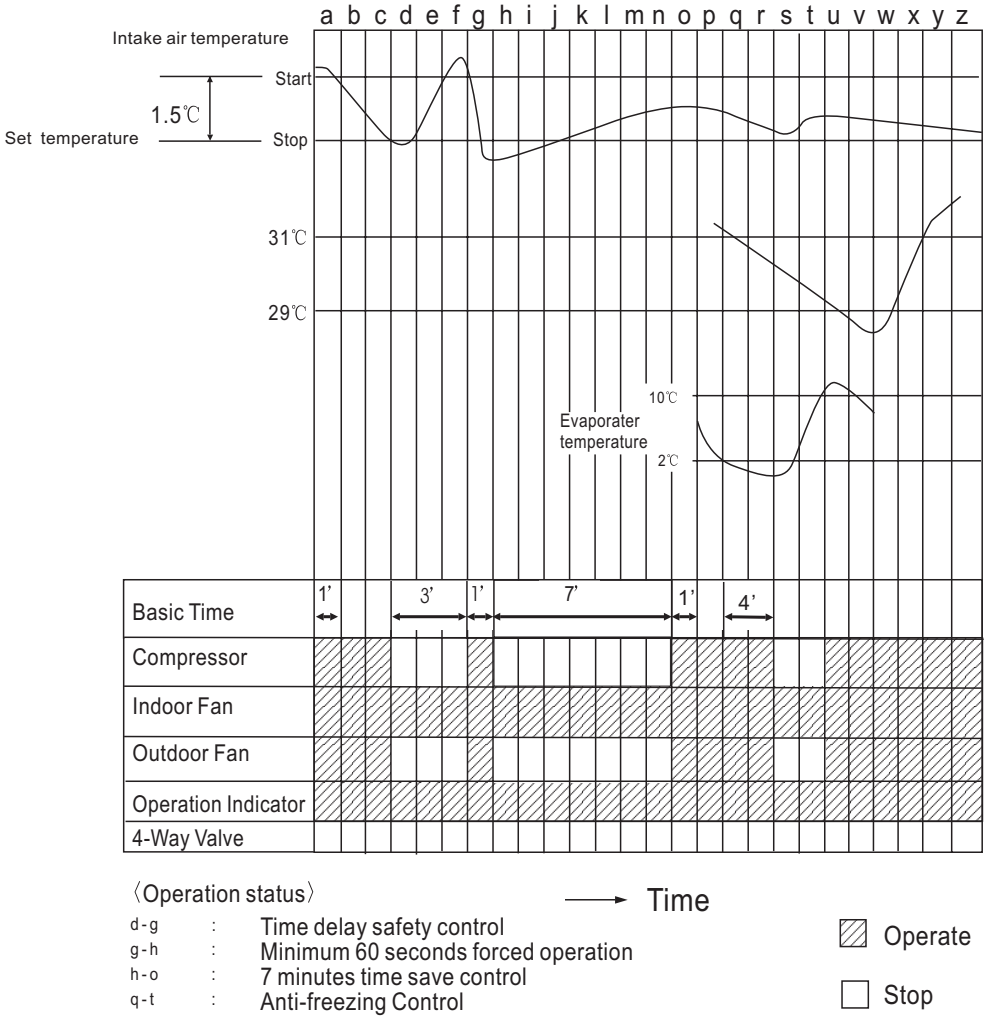

8.2. Soft Dry Mode Operation

- Operation area

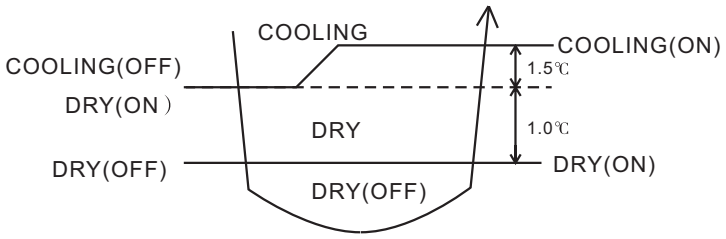

- When selecting Soft Dry mode operation, the operation will be cooling until the room temperature reaches the set temp on remote control, and then Soft Dry will be activated. (During Soft Dry Mode the fan of indoor unit will operate at super low speed. The soft dry mode will run for less than 10 minutes.)
- Once Soft Dry mode operation is turned off, indoor fan, compressor and outdoor fan will stop for 6 minutes.

Time Delay Safety Protection

- During soft dry operation, if the compressor ceased, it will not restart within 3 minutes.

Anti Freezing Control

- Same as the denotation in Cooling Operation.(P14)
  (During Soft Dry Mode Operation, compressor will stop for at least 6 min.)

Automatic Fan Speed

- During Soft Dry Operation, use remote controller to select Auto Fan Speed mode. Indoor Fan Speed is at "Lo-"

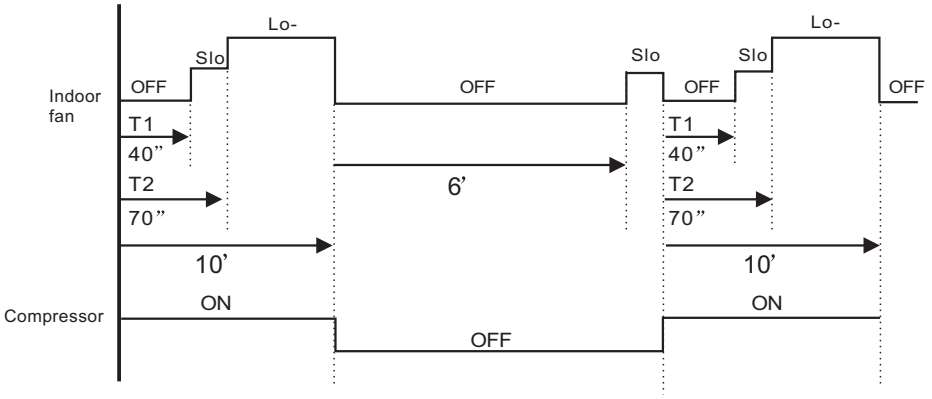

Time Graph for soft dry operation

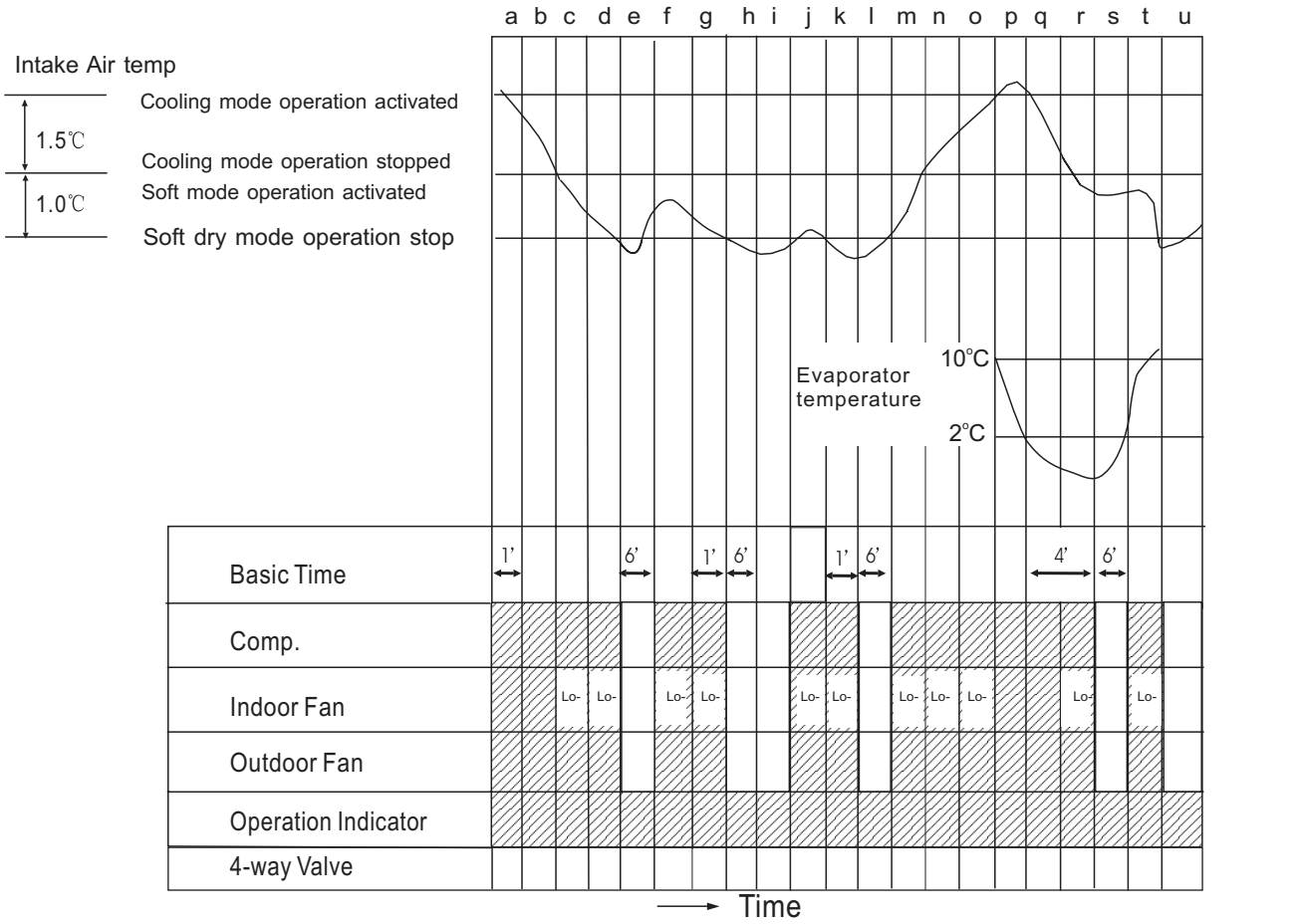

〈Operation status〉

a-c, p-r	:	Cooling Mode Operation
c-p, r-u	:	Soft Dry Mode Operation
e-f	:	Soft Dry Mode Operation Stopped
j-l	:	Compressor Test Operation Control
q-t	:	Anti Freezing Control

—— Cooling mode operation

- - - - Soft Dry Mode operation

▨ Operate

□ Stop

8.3. Heating Mode Operation

When selecting the Heating Mode Operation, the unit will operate according to the setting by the Remote Controller and the operation is as the following.

Time Delay Safety Control

- If the compressor stopped by switching off, turning off by remote controller, or power off, it will not restart within 3 minutes.
- When room temperature reaches the set temperature on the remote controller, compressor stops and will not restart within 4 minutes.
- 3 minutes after the compressor stopped, indoor fan will stop for 1 minute. Then indoor fan will resume operation with the speed at ”super low”.

Over Load protection Control

- When temperature of indoor heat exchanger rises to 51℃, outdoor fan will stop when temperature of indoor heat exchanger falls to 49℃, outdoor fan will restart.
- When temperature of indoor heat exchanger rises to 65℃ or above, compressor stops, and will restart 4 minutes later.

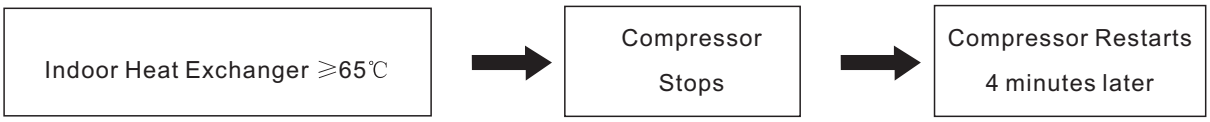

Anti-reversing Control

- If the compressor has been continuously running for 5 minutes or longer, and the difference of temperature between intake air and evaporator is continuously lower than 5.0℃ or below for 2 minutes, the compressor will stop , and then restart 3 minutes later.(Time Delay Protection Control is effective.)

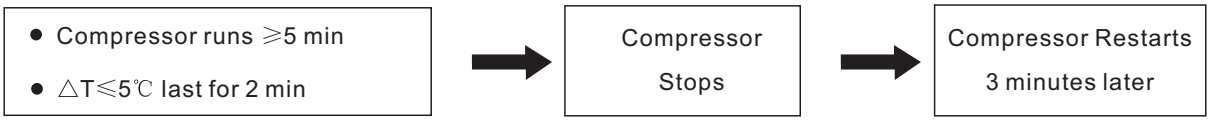

△T= evaporator temperature - intake air temperature

4-way valve control

- During heating mode operation,4-way valve is at “open” mode.
- During heating mode operation,if the unit turned off, the 4-way valve will remain at “open” mode for 5 minutes.

Warm Booting Control

- When turning on the unit by heating mode operation,indoor fan will be activated when temperature of indoor heat exchanger reaches 30℃. (See the figure on the right)
- Warm boot operation ends when temperature of indoor heat exchanger reaches 34℃.

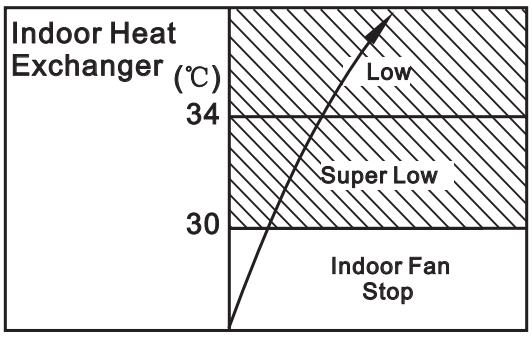

Automatic Fan Speed

During Heating Operation, use remote controller to select Auto Fan Speed mode.
Indoor Fan Speed is between “Me” and “Slo”.

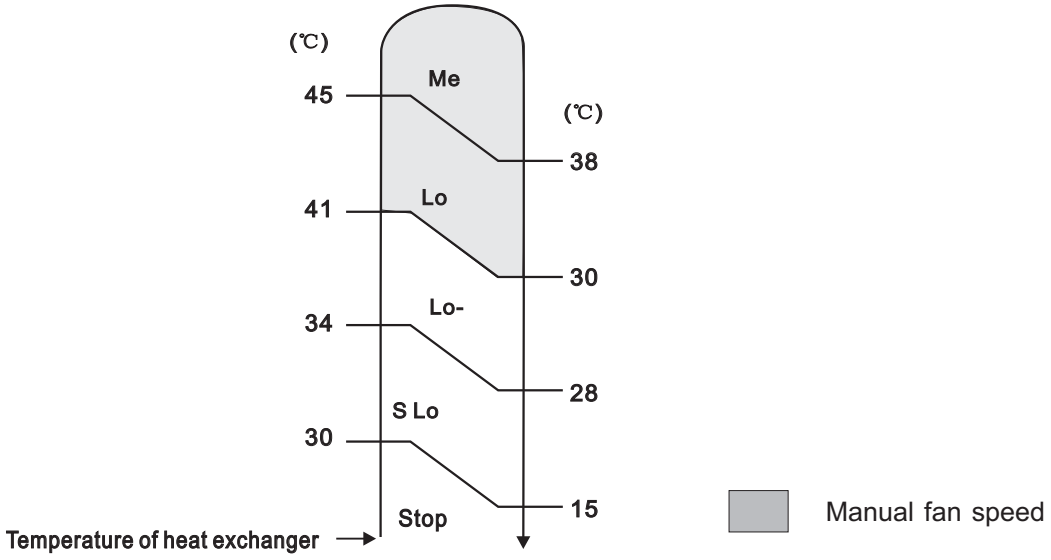

Time Graph for Heating Operation

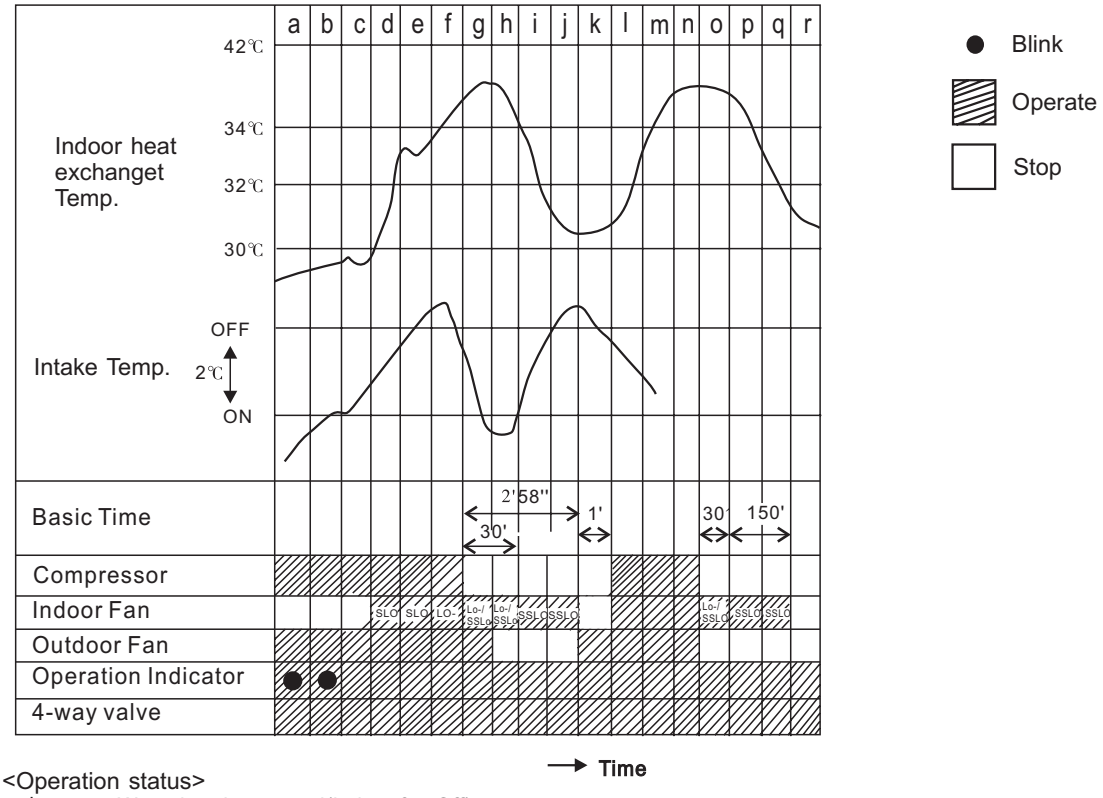

<Operation status>
a-b : Warm booting control(indoor fan Off)
c-d : Warm booting control(indoor fan Super Slo)
h-k,o-r: Prevent cool air blowing out

Deice Control

Deice operation is to protect the outdoor unit from freezing.

- Normal Deice Operation
  Deicing starts 30 minutes after heating mode operation or 60 minutes after the latest deicing operation. If temperature of outdoor piping, tested by TRS, falls to -3℃ (TRS OFF) or below for continuously 50 seconds, deicing operation starts.
- Overload Deicing Operation
  During heating operation, if the accumulative stopping time of outdoor fan reaches 60 minutes, deicing operation will start 1 minute after compressor starts.
- Deicing operation ends under conditions below
  (a) After 12 minutes.
  (b) Temperature of outdoor unit rises to 4℃.
  (c) As the illustration showed bellow and due to Time Delay (Td), deicing won't ends immediately.

Deicing Operation Time(T)	Td(s)
<3 min	0
3min ≤T<7min	60
7 min≤T<9min	120
T≥9min	120

- Once deicing operation starts, it won't end until 60 seconds later.
- When deicing operation ends, compressor will stop for 30 seconds, and 4-way valve remains at cooling mode operation for 10 seconds.

Time Graph for Normal Deicing Operation

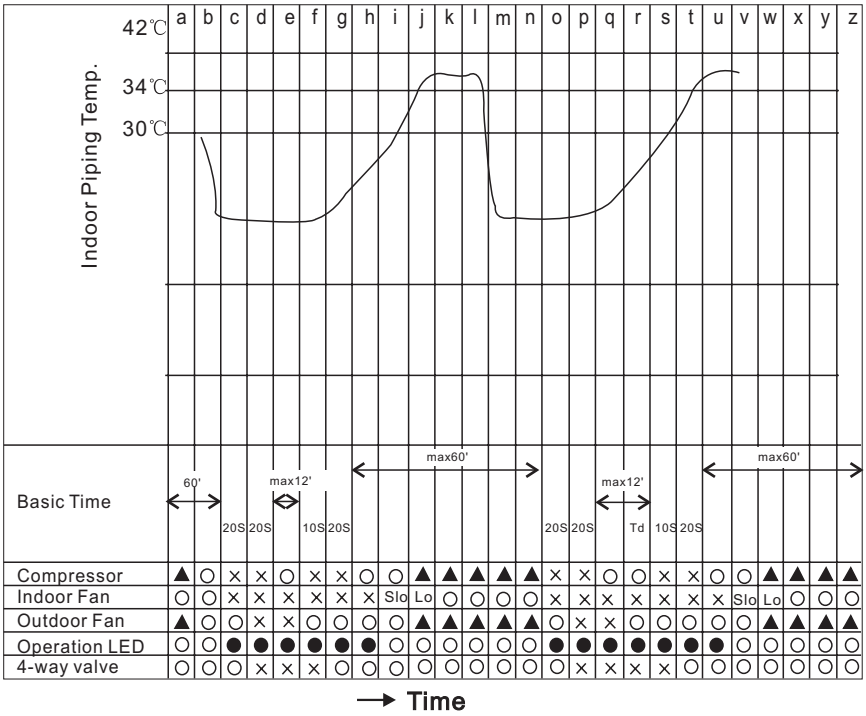

▲ ○ or ×
● Blink
○ Operation
× Stop

<Operation status>

A-b : Deicing confirmation
c-g : Deicing operation(time reset)
h-j,u-w : Warm Booting
o-r : Deicing(TRS)

Time Graph for Overload Deicing

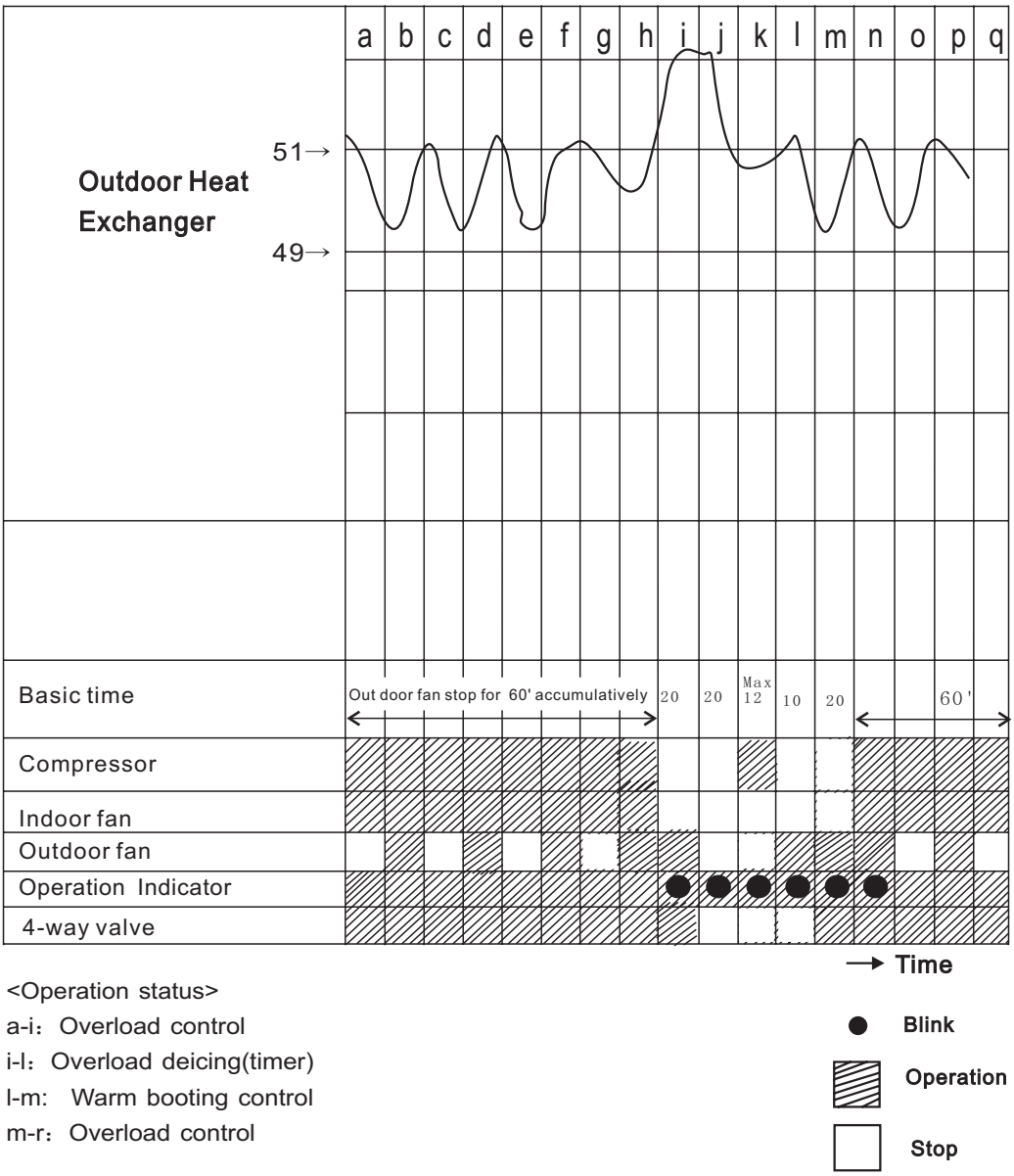

<Operation status>

a-i：Overload control

i-l：Overload deicing(timer)

l-m: Warm booting control

m-r：Overload control

8.4. Automatic Mode Operation

Standard for Determining Operation Mode

- First Determination:

Intake Air temperature		
	23℃	Cooling mode
		Soft Dry mode
	20℃	Heating mode

	Setting Temperature (Standard)
Cooling mode	25℃
Soft Dry mode	22℃
Heating mode	21℃

- Second Determination:

One hour after the above determination, the unit will operate according to the table below.

		Second Determination		
		Cooling	Dry	Heating
First determination	Cooling	23℃ or above	———	23℃ below
	Dry	———	20℃ or above	20℃ below
	Heating	25℃ or above	———	25℃ below

Indoor fan operates at super low speed for 20 seconds.

A) After judging indoor air temperature, the operation is determined and operation continued at the mode determined.

B) If indoor temperature is less than 16℃, heating operation will immediately operate.

C) After the operation mode has been determined, the mode does not change. However, Soft Dry mode operation includes cooling mode operation.

D) If automatic mode operation is started while the unit is operating, operation will continue.

E) If current operation is in cooling mode (including the cooling mode operation when is a part of Soft Dry mode operation) it will be maintained, and if current operation is not cooling mode, the appropriate operation mode is determined for 20seconds at super slow fan speed. Then the selected mode will continue.

F) The setting temperature for all the operations can be changed one level up or one level down from the standard temperature as shown below by pressing the temperature up or down button at remote control.

			Heating	Cooling	Soft Dry
Higher	→	+2℃	23℃	27℃	24℃
Standard	→	±0℃	21℃	25℃	22℃
Lower	→	−2℃	19℃	23℃	20℃

8.5. Indoor Fan Motor Control

- Automatic fan speed control
  When automatic fan speed set, the available range for fan speed is from Hi to Sslo.
- Manual Fan Speed Control
  Basic fan speed can be manually adjusted (Lo, Med, Hi) by using the fan speed selection button.

- Basic Fan Speed

Category		Shi	Hi	Me	Lo	Lo-	(Lo-)	SLo	SSLo
Cooling Mode Operation	Auto		○	○				○	
	Manual		○	○	○				
Soft Dry Operation	Auto					○		○	
	Manual					○		○	
Heating mode operation	Auto			○	○		○	○	○
	Manual	○		○	○		○	○	○

Category		Shi	Hi	Me	Lo	Lo-	(Lo-)	Slo	SLo
XA9DKD	Cool, Dry	–	1260	1050	920	–		600	–
	Dry	–	–	–		890		600	–
	Heat	1260	–	1050	920	–	800	600	400
XA12DKD	Cool, Dry		1260	1090	980	–		600	–
	Dry		–	–	–	950		600	–
	Heat	1280	–	1090	980	–		600	400

8.6. Airflow Direction Control

Airflow Direction Auto-control

- When set at airflow direction auto-control with remote control,the louver swings up and down as shown in the table below.
- The louver does not swing when the indoor fan stops during operation.
- When stop the unit with remote control,the discharge vent is closed with the louver.

※ The left and right airflow direction louver can be adjusted manually.

Airflow direction manual control

- When the airflow direction set button is pressed,the automatic airflow is released and the airflow direction louver moves up and down as shown in thetable below. The louver can be stopped by releasing the button at the desired position.
- When the remote control is used to stop the operation,the discharge vent is closed with airflow direction louver.

Angles Of Airflow Direction Louver

Operating Mode		1	2	3	4	5
Cooling Soft dry	Manual	12°	17°	26°	32°	36°
	Auto	12° ~36°				
Heating	Manua	9°	21°	29°	44°	55°
	Auto	9° ~55°				
Determining operation mode		9°				

Notes:

- In cooling or soft dry mode operation

If the compressor continues to operate for 60 minutes ,and the louver direction is at No 5,the fan speed is below Med, the intake air temperature is below 29 ℃ and continues to change between 2 ℃ for 30 minutes ,the louver direction will be at No 2 in order to prevent dew around the discharge vent.

8.7 Oxygen Mode Operation.

- To supply oxygen enrich air to indoor for healthier and comfortable environment and wider operation scope.
- When oxygen operation is On by pressing the Oxygen buttonat remote control , LED on air conditioner unit lights, vacuum pump and outdoor fan operates.

  *Note: Outdoor fan must run with vacuum pump operates.

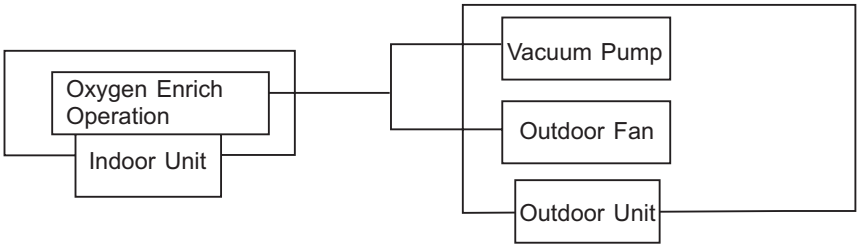

8.7.1. Operation Control

1. Indoor fan control

a. Manual Fan Speed

During Oxygen operate individually, Manual Fan Speed can not be set by remote control.

b. Auto Fan Speed

Fan Speed control is shown as below.

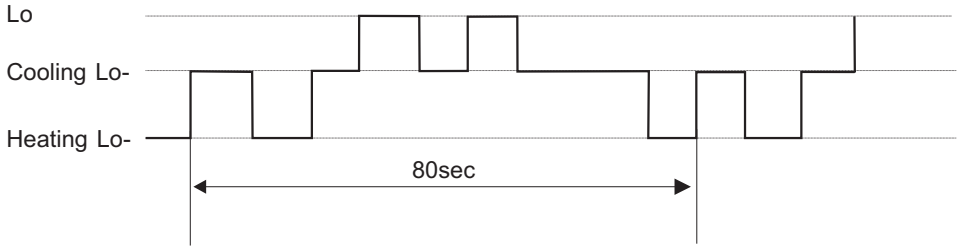

2. Indoor airflow direction control

Airflow direction manual, auto ---- same as cooling operation

However , during combined-operation , priority is given to airflow direction control as other mode.

3. Oxygen Enrich Individual Operation

A. When air conditioner unit is at “OFF” condition (standby) and the cursor key on the remote control display points to OFF , press the oxygen button at remote control. The cursor key pointing to the OFF disappears and the mark O_2 will appear on the remote control display. In the meanwhile, only oxygen LED illuminates.

B. During Oxygen Enrich individual Operation, operation mode (Heat, Cool, Dry) can be activated by pressing OFF/ON button respectively.

4. Operation Mode & Oxygen Enrich operation

a. When air conditioner unit is at “ON” condition and oxygen button at remote control is pressed, the oxygen operation will turn on. Oxygen and power LED will illuminate.

B. When air conditioner unit is at “OFF” condition and OFF/ON operation button at remote control is pressed, the unit runs as previous setting and oxygen operation will turn on.

C. Oxygen Enrich Operation stops when:

- Oxygen button is pressed again
- stopped by OFF/ON operation button
- Timer OFF activates

D. Oxygen enrich operation is not memorised when the air conditioner has been switched off. The air conditioner will operate without oxygen enrich operation when it is turned on again.

8.7.2. Oxygen Enrich Protection Control

- **Vacuum pump restart protection control**

Purpose : To prevent starting noise caused by vacuum pump's frequently restart in a short period.

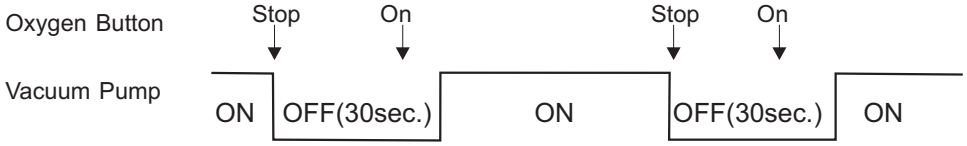

8.7.3. Oxygen Operation time diagram.

- **Oxygen Enrich Individual operation mode**

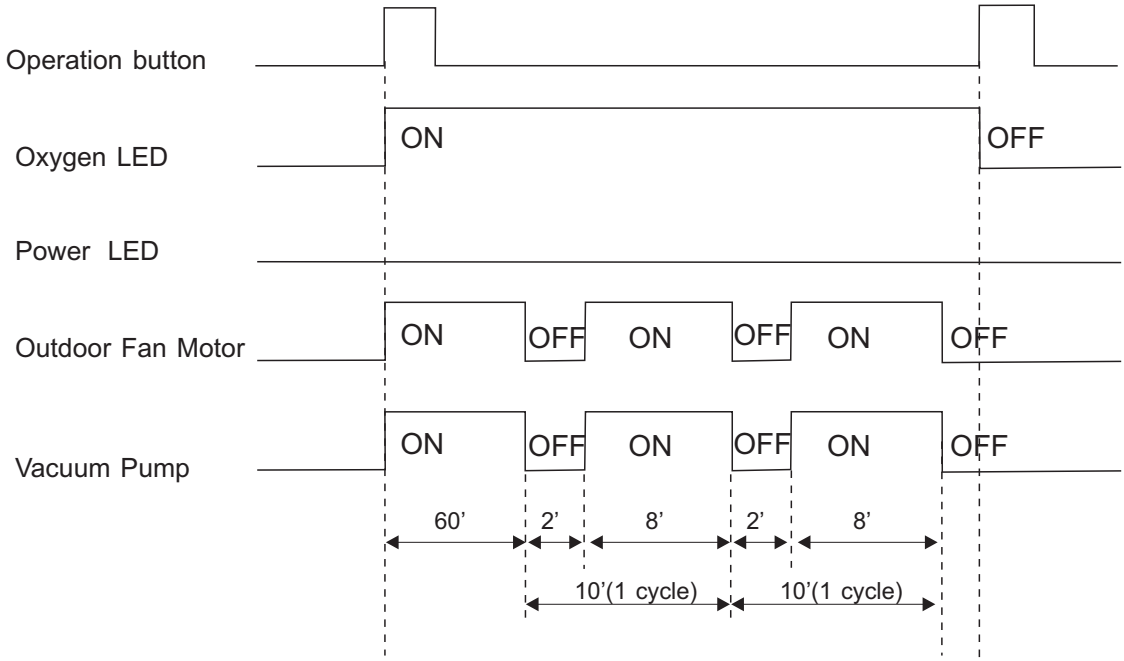

- Combined-operation mode

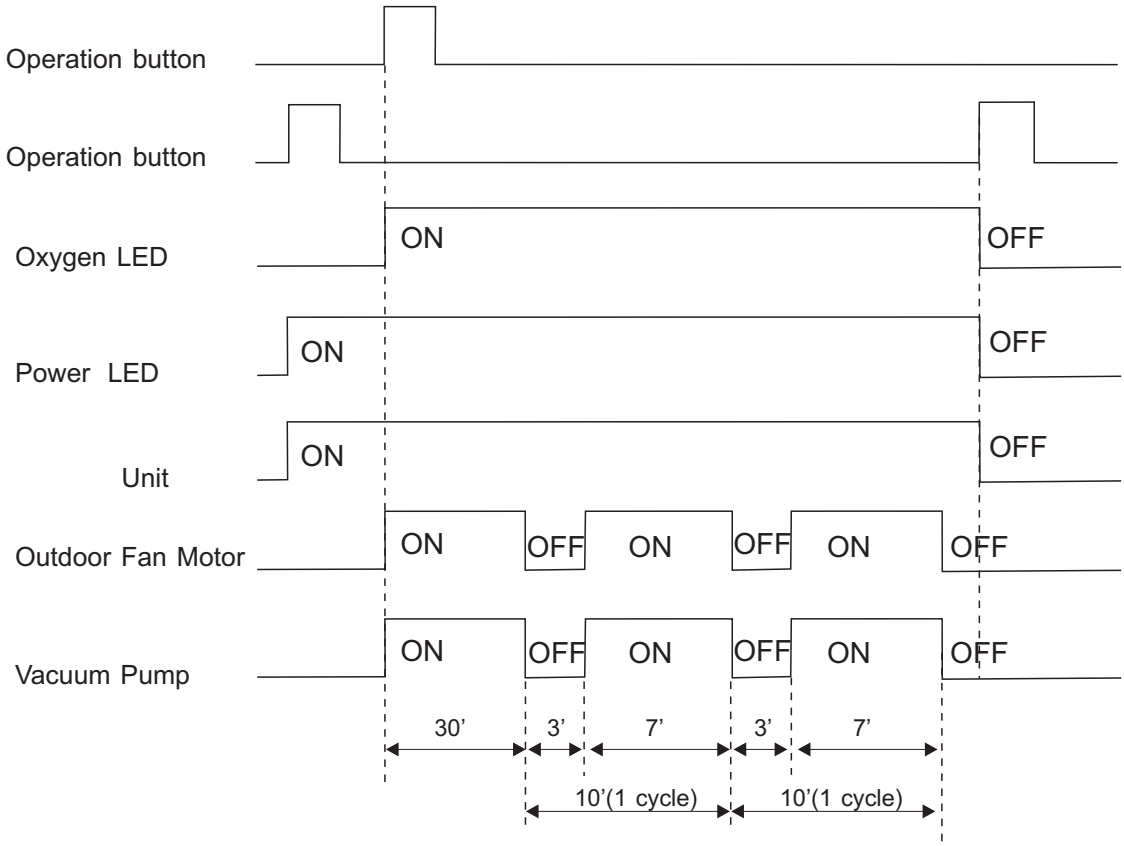

8.7.4. Timer Setting

1. When the unit stops operating, OF-TIMER is not available;
   When the unit is running(including oxygen individual operation), ON-TIMER is not available.

2. When OFF-TIMER is set during oxygen individual operation, the unit won't stop oxygen operation until the setting time is out.

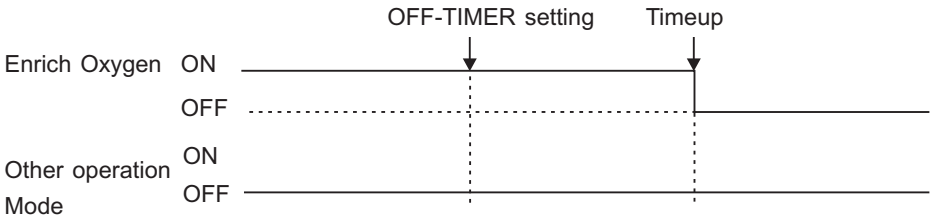

- During the Oxygen individual operation, to set ON-TIMER after the unit switching off , the unit will run under the Oxygen individual operation mode(the previous operation mode) when reaching the setting time..

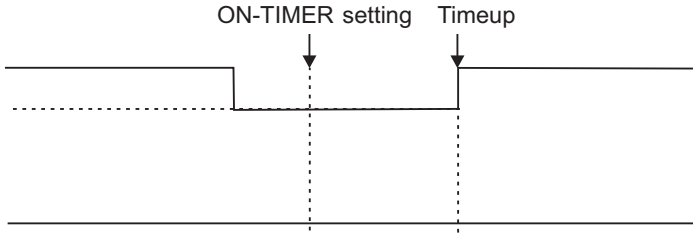

3. When OFF-TIMER is set during combined-operation, the unit won't stop oxygen operation until reaching the setting time.

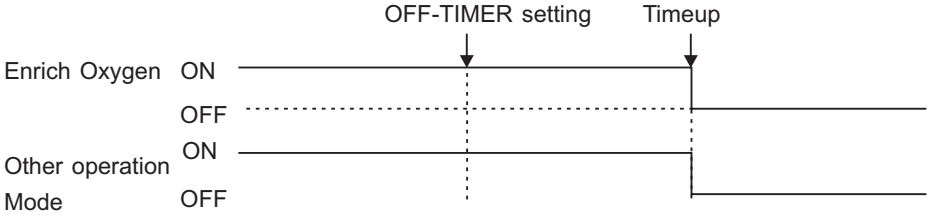

- During the Oxygen individual operation, to set ON-TIMER after the unit switching off , the unit will run under the combinded-operation mode(the previous operation mode) when reaching the setting time

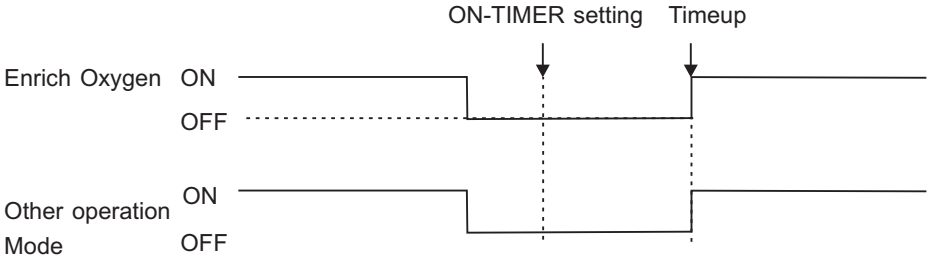

4.To set ON-TIMER when the unit is not in operation, Timer ON could be cancelled by pressing the Oxygen Button. And the unit will run under the oxygen operation mode.

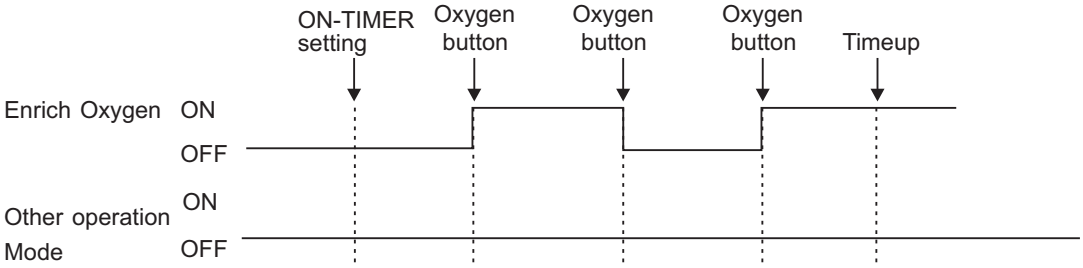

Note:

When the ON-TIMER is set, operation will start before the actual set time. This is to enable the room temperature to reach the set temperature at the set time.
COOL- 15 minutes in advance.
HEAT, AUTO - 30 minutes in advance

8.8 About Cursor Key Which Points To "OFF" On Remote Control

- When the ON/OFF button on the remote control is pressed, the cursor key which points to "OFF" will appear or disappear to indicate the ON/OFF status of the air conditioner.

- For some reason (Ex. The signal of the remote control does not reach the signal receiver of the indoor unit.), the display of the remote control will not correspond with the actual ON/OFF status of the indoor unit:
  1. The air conditioner is running but the cursor key which points to "OFF" appears. The air conditioner can be stopped with any button (Except for "ON/OFF", "TIMER SET", "TIMER ON") pressed.
  2. The air conditioner is on standby, but the cursor key which points to "OFF" disappears. The air conditioner can be started with any button(Except for "ON/OFF", "TIMER SET", "TIMER OFF") pressed.

8.9 Random Auto restart control

- If there is a power failure during air conditioner operation, operation will be automatically restarted after 3 to 4 minutes when the power is resumed.
- It will start with previous operation mode and airflow direction.
- Auto Restart Control is not available when Timer is set.

9 Installation Instructions

Required tools for Installation Works			
1. Philips screw driver	5. Spanner	9. Gas leak detector	13. Multimeter
2. Level gauge	6. Pipe cutter	10. Measuring tape	14. Torque wrench 18 N.m (1.8 kgf.m) 42 N.m (4.2 kgf.m) 55 N.m (5.5 kgf.m)
3. Electric drill, hole core drill (ø70 mm)	7. Reamer	11. Thermometer	15. Vacuum pump
4. Hexagonal wrench (4 mm)	8. Knife	12. Megameter	16. Gauge manifold

9.1. Safety Precautions

- Read the following "SAFETY PRECAUTIONS" carefully before installation.
- Electrical work must be installed by a licensed electrician. Be sure to use the correct rating of the power plug and main circuit for the model to be installed.
- The caution items stated here must be followed because these important contents are related to safety. The meaning of each indication used is as below. Incorrect installation due to ignoring of the instruction will cause harm or damage, and the seriousness is classified by the following indications.

⚠ **WARNING**	This indication shows the possibility of causing death or serious injury.

⚠ **CAUTION**	This indication shows the possibility of causing injury or damage to properties only.

The items to be followed are classified by the symbols:

⃠	Symbol with background white denotes item that is PROHIBITED from doing.

- Carry out test running to confirm that no abnormality occurs after the installation. Then, explain to user the operation, care and maintenance as stated in instructions. Please remind the customer to keep the operating instructions for future reference.

⚠ **WARNING**	
1. Engage dealer or specialist for installation. If installation done by the user is defective, it will cause water leakage, electrical shock or fire.	
2. Install according to this installation instruction strictly. If installation is defective, it will cause water leakage, electrical shock or fire.	
3. Use the attached accessories parts and specified parts for installation. Otherwise, it will cause the set to fall, water leakage, fire or electrical shock.	
4. Install at a strong and firm location which is able to withstand the set's weight. If the strength is not enough or installation is not properly done, the set will drop and cause injury.	
5. For electrical work, follow the local national wiring standard, regulation and this installation instruction. An independent circuit and single outlet must be used. If electrical circuit capacity is not enough or defect found in electrical work, it will cause electrical shock or fire.	
6. Use the specified cable (1.5 mm^2) and connect tightly for indoor/outdoor connection. Connect tightly and clamp the cable so that no external force will be acted on the terminal. If connection or fixing is not perfect, it will cause heat-up or fire at the connection.	
7. Wire routing must be properly arranged so that control board cover is fixed properly. If control board cover is not fixed perfectly, it will cause heat-up at connection point of terminal, fire or electrical shock.	
8. When carrying out piping connection, take care not to let air substances other than the specified refrigerant go into refrigeration cycle. Otherwise, it will cause lower capacity, abnormal high pressure in the refrigeration cycle, explosion and injury.	
9. When connecting the piping, do not allow air or any substances other than the specified refrigerant (R22) to enter the refrigeration cycle. Otherwise, this may lower the capacity, cause abnormally high pressure in the refrigeration cycle, and possibly result in explosion and injury.	⃠
10. Do not modify the length of the power supply cord or use of the extension cord, and do not share the single outlet with other electrical appliances. Otherwise, it will cause fire or electrical shock. if the power supply cord is damaged, engage an authorized dealer to replace it.	⃠

⚠ CAUTION

1. The equipment must be earthed. It may cause electrical shock if grounding is not perfect.
2. Do not install the unit at place where leakage of flammable gas may occur. In case gas leaks and accumulates at surrounding of the unit, it may cause fire.
3. Carry out drainage piping as mentioned in installation instructions. If drainage is not perfect, water may enter the room and damage the furniture.

ATTENTION

1. Selection of the installation location.
   Select a installation location which is rigid and strong enough to support or hold the unit, and select a location for easy maintenance.
2. Power supply connection to the room air conditioner.
   Connect the power supply cord of the room air conditioner to the mains using one of the following method.
   Power supply point shall be the place where there is ease for access for the power disconnection in case of emergency.
   In some countries, permanent connection of this room air conditioner to the power supply is prohibited.
   1. Power supply connection to the receptacle using a power plug.
      Use an approved 10A power plug with earth pin for the connection to the socket.
   2. Power supply connection to a circuit breaker for the permanent connection. Use an approved 10A circuit breaker for the permanent connection. It must be a double pole switch with a minimum 3 mm contact gap.
3. Do not release refrigerant.
   Do not release refrigerant during piping work for installation, reinstallation and during repairing a refrigeration parts. Take care of the liquid refrigerant, it may cause frostbite.
4. Installation work.
   It may need two people to carry out the installation work.
5. Do not install this appliance in a laundry room or other location where water may drip from the ceiling, etc.

Attachedaccessories.

No.	Accessories par	Qty.	No	Accessories par	Qty.
1	Installation plate	1	6	Connecting Wire (Connector)	1
2	Installation plate fixing screw	5	7	Oxygen Tube	1
3	Remote control	1	8	Insulating sleeve	1
4	Battery	2	9	Insulating material	1
5	Drain elbow	1			

SELECT THE BEST LOCATION

INDOOR UNIT

- There should not be any heat source or steam near the unit.
- There should not be any obstacles blocking the air circulation.
- A place where air circulation in the room is good.
- A place where drainage can be easily done.
- A place where noise prevention is taken into consideration.
- Do not install the unit near the door way.
- Ensure the spaces indicated by arrows from the wall, ceiling, fence or other obstacles.
- Recommended installation height for indoor unit shall be at least 2.5 m.

OUTDOOR UNIT

- If an awning is built over the unit to prevent direct sunlight or rain, be careful that heat radiation from the condenser is not obstructed.
- There should not be any animal or plant which could be affected by hot air discharged.
- Keep the spaces indicated by arrows from wall, ceiling, fence or other obstacles.
- Do not place any obstacles which may cause a short circuit of the discharged air.

Model	Piping size		Max. Elevation (m)	Max. Piping Length (m)
	Gas	Liquid		
CS/CU-XA9DKD	3/8"	1/4"	5	7
CS/CU-XA12DKD	1/2"	1/4"	5	7

Indoor/Outdoor Unit Installation Diagram

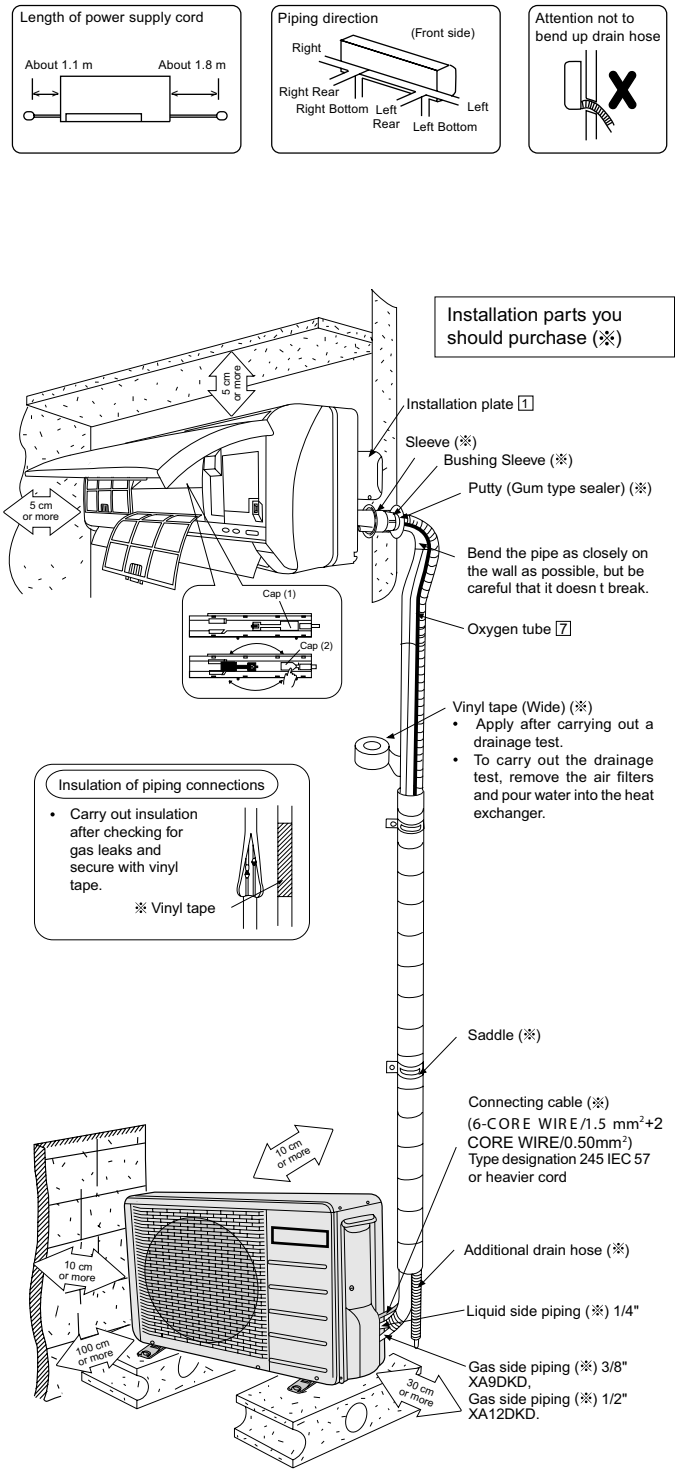

• This illustration is for explanation purposes only. The indoor unit will actually face a different way.

9.2. INDOOR UNIT

9.2.1. SELECT THE BEST LOCATION (Refer to “Select the best location” section)

9.2.2. HOW TO FIX INSTALLATION PLATE

The mounting wall is strong and solid enough to prevent it from the vibration.

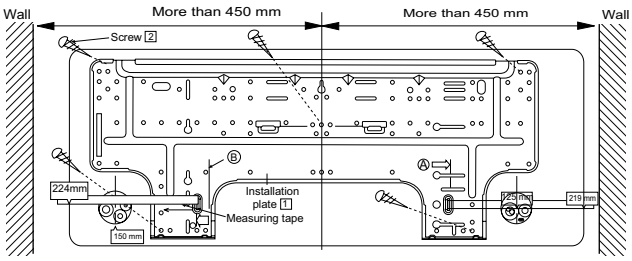

The centre of installation plate should be at more than 450 mm at right and left of the wall.

The distance from installation plate edge to ceiling should more than 67 mm.

From installation plate left edge to unit’s left side is 74 mm.

From installation plate right edge to unit’s right is 94 mm.

Ⓑ : For left side piping, piping connection for gas should be about 45 mm from this line.

: For left side piping, piping connecting cable should be about 800 mm from this line.

1. Mount the installation plate on the wall with 5 screws or more.
   (If mounting the unit on the concrete wall consider using anchor bolts.)
   - Always mount the installation plate horizontally by aligning the marking-off line with the thread and using a level gauge.

2. Drill the piping plate hole with ø70 mm hole-core drill.
   - Line according to the arrows marked on the lower left and right side of the installation plate. The meeting point of the extended line is the centre of the hole. Another method is by putting measuring tape at position as shown in the diagram above. The hole centre is obtained by measuring the distance namely 105 mm and 145 mm for left and right hole respectively.
   - Drill the piping hole at either the right or the left and the hole should be slightly slanted to the outdoor side.

9.2.3. TO DRILL A HOLE IN THE WALL AND INSTALL A SLEEVE OF PIPING

1. Insert the piping sleeve to the hole.
2. Fix the bushing to the sleeve.
3. Cut the sleeve until it extrudes about 15 mm from the wall.

> **Caution**
> When the wall is hollow, please be sure to use the sleeve for tube ass’y to prevent dangers caused by mice biting the connecting cable.

4. Finish by sealing the sleeve with putty or caulking compound at the final stage.

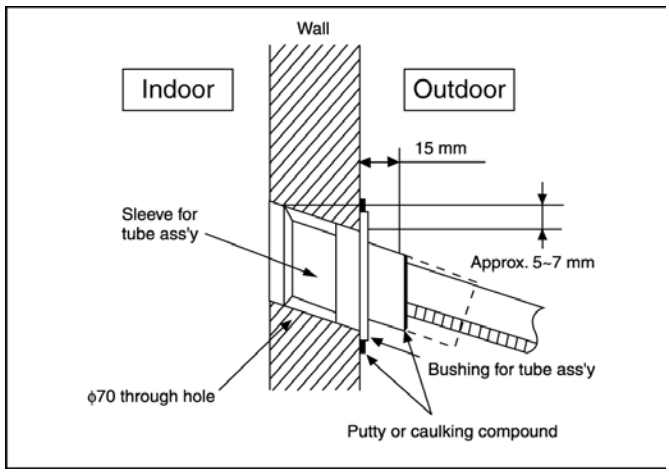

9.2.4. INDOOR UNIT INSTALLATION

1. For the right rear piping

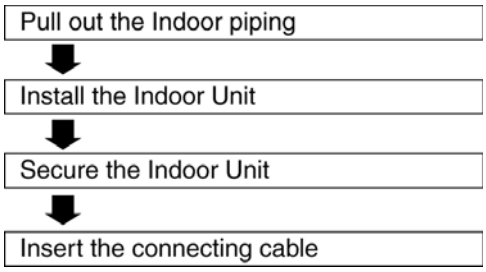

2. For the right and right bottom piping

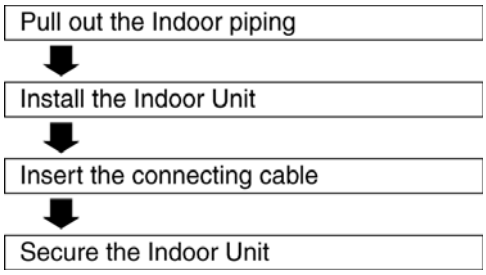

3. For the embed ded piping

Replace the drain hose

↓

Bend the embedded piping

↓ • Use a spring bender or equivalent to bend the piping so that the piping is not crushed.

Install the Indoor Unit

↓

Cut and flare the embedded piping

↓ • When determing the dimension of the piping, slide the unit all the way to the left on the installation plate.
Refer to the section "Cutting and flaring the piping".

Pull the connecting cable into Indoor Unit

↓ • The inside and outside connecting cable can be connected without removing the front grille.

Connect the piping

↓ • Please refer to "Connecting the piping" column in outdoor unit section. (Below steps are done after connecting the outdoor piping and gas-leakage confirmation.)

Insulate and finish the piping

↓ • Please refer to "Piping and finishing" column of outdoor section and "Insulation of piping connections" column as mentioned in Indoor/ Outdoor Unit Installation.

Secure the Indoor Unit

Installthe IndoorUnit

Hook the indoor unit onto the upper portion of installation plate (Engage the indoor unit with the upper edge of the installation plate). Ensure the hooks are properly seated on the installation plate by moving in left and right.

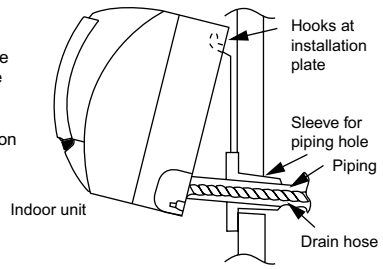

Secure the IndoorUnit

1. Tape the extra power supply cord in a bundle and keep it behind the chassis.
   - Ensure that the power supply cord is not clamped in between the unit's hook (2 positions) and installation plate.
2. Press the lower left and right side of the unit against the installation plate until hooks engages with their slots (sound click).

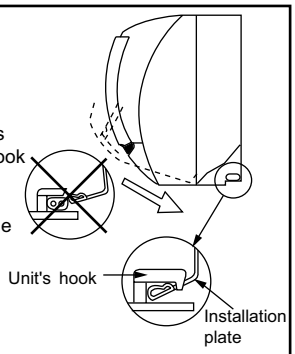

Pull out the piping and drain hose

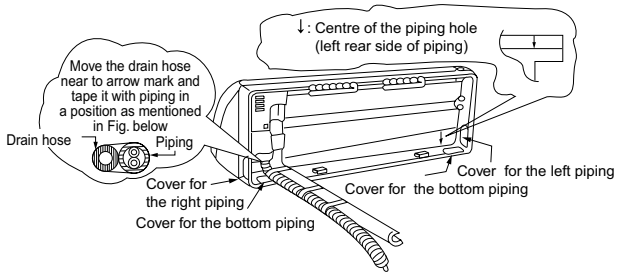

To take out the unit, push the PUSH marking at the bottom unit, and pull it slightly towards you to disengage the hooks from the unit.

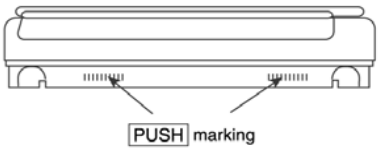

(This can be used for left rear piping & left bottom piping also.)

How to keep the cover

In case of the cover is cut, keep the cover at the rear of chassis as shown in the illustration for future reinstallation.

(Left, right and 2 bottom covers for piping)

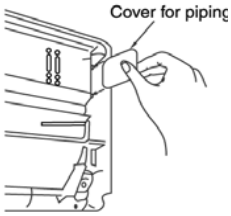

Exchange the drain hose and the cap

Refer view for left piping installation

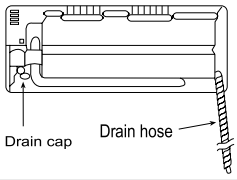

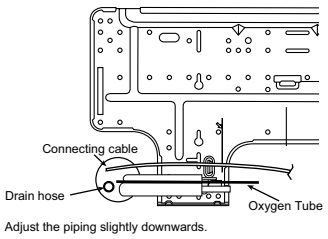

Adjust the piping slightly downwards

Insert the connecting cable

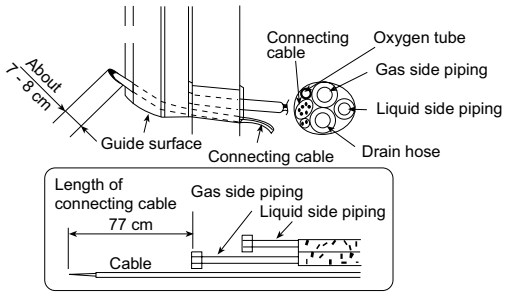

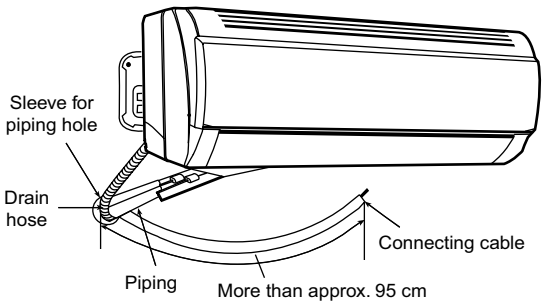

• How to pull the piping and drain hose out, in case of the embedded piping.

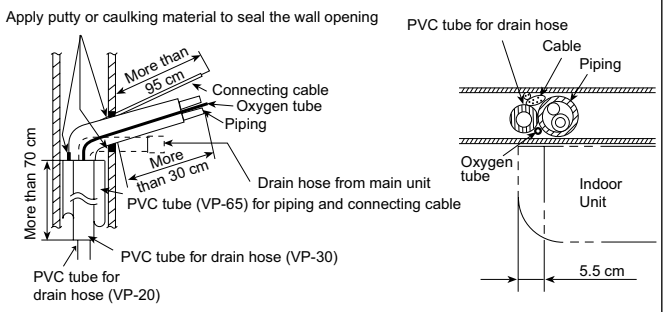

• In case of left piping how to insert the connecting cable and drain hose

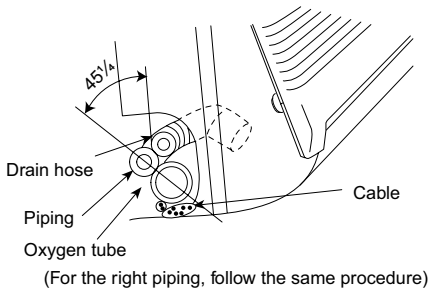

(For the right piping, follow the same procedure)

9.2.5. CONNECT THE CABLE TO THE INDOOR UNIT

1. The inside and outside connecting cable can be connected without removing the front grille.
2. Connecting cable between indoor unit and outdoor unit shall be approved polychloroprene sheathed 6 x 1.5 mm^2 flexible cord, type designation 245 IEC 57 or heavier cord. The attached wire 6 with two connectors should be applied.
   - Ensure the color of wires of outdoor unit and the terminal Nos. are the same to the indoor's respectively.
   - Earth lead wire shall be longer than the other lead wires as shown in the figure for the electrical safety in case of the slipping out of the cord from the anchorage.

Terminals on the indoor unit	1(L)	2(N)	3	4	5	⏚
Color of wires						
Terminals on the outdoor unit	1(L)	2(N)	3	4	5	⏚

Connector

- Secure the cable onto the control board with the holder (clamper).

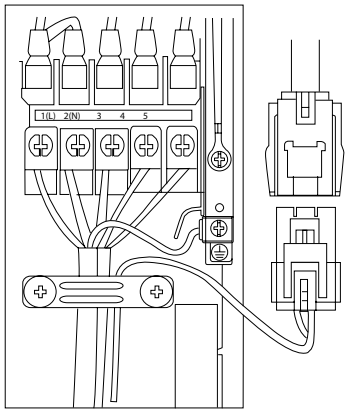

HOW TO TAKE OUT FRONT GRILE

Please follow the steps below to take out front grille if necessary such as when servicing.

1. Set the vertical airflow direction louver to the horizontal position.
2. Slide down the two caps on the front grille as shown in the illustration at right, and then remove the two mounting screws.
3. Pull the lower section of the front grille towards you to remove the front grille.

When reinstalling the front grille, first set the vertical airflow direction louvre to the horizontal position and then carry out above steps 2 - 3 in the reverse order.

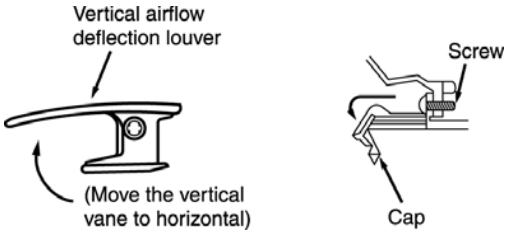

AUTO SWITCH OPERATION

The below operations will be performed by pressing the "AUTO" switch.

1. AUTO OPERATION MODE

   The Auto operation will be activated immediately once the Auto Switch is pressed.

2. TEST RUN OPERATION (FOR PUMP DOWN/SERVICING PURPOSE)

   The Test Run operation will be activated if the Auto Switch is pressed continuously for more than 5 sec. to below 10 sec. A "pep" sound will occur at the fifth sec., in order to identify the starting of Test Run operation

3. REMOTE CONTROLLER RECEIVING SOUND ON/OFF

   The ON/OFF of Remote Controller receiving sound can be changed over by pressing the "AUTO" Switch continuously for 10 sec. and above. A "pep", "pep" sound will occur at the tenth sec., in order to indicate the "ON/OF" changed over of remote control receiving sound.

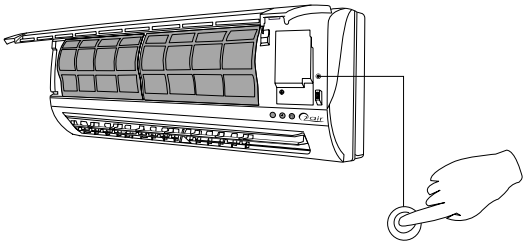

9.3. OUTDOOR UNIT

9.3.1. SELECT THE BEST LOCATION (Refer to "Select the best location" section)

9.3.2. INSTALL THE OUTDOOR UNIT

- After selecting the best location, start installation according to Indoor/Outdoor Unit Installation Diagram.

1. Fix the unit on concrete or rigid frame firmly and horizontally by bolt nut. (ø10 mm).
2. When installing at roof, please consider strong wind and earthquake. Please fasten the installation stand firmly with bolt or nails.

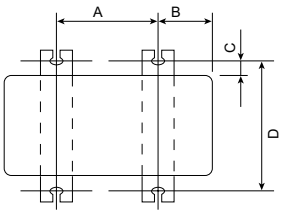

Unit: mm

Model	A	B	C	D
CU-XA9DKD CU-XA12DKD	570	103.9	13.3	320

9.3.3. CONNECTING THE PIPING

Connecting The Piping To Indoor Unit

Please make flare after inserting flare nut (locate at joint portion of tube assembly) onto the copper pipe. (In case of using long piping)

Connect the piping

- Align the center of piping and sufficiently tighten the flare nut with fingers.
- Further tighten the flare nut with torque wrench in specified torque as stated in the table.

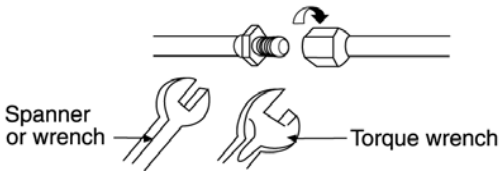

MODEL	Piping size (Torque)	
	Gas	Liquid
XA9DKD	3/8" (42 N.m)	1/4" (18 N.m)
XA12DKD	1/2" (55 N.m)	1/4" (18 N.m)

Connecting The Piping To Outdoor Unit

- Decide piping length and then cut by using pipe cutter. Remove burrs from cut edge. Make flare after inserting the flare nut (located at valve) onto the copper pipe.
- Align center of piping to valves and then tighten with torque wrench to the specified torque as stated in the table.

CUTTING AND FLARING THE PIPING

1. Please cut using pipe cutter and then remove the burrs.
2. Remove the burrs by using reamer. If burrs is not removed, gas leakage may be caused.

   Turn the piping end down to avoid the metal powder entering the pipe.
3. Please make flare after inserting the flare nut onto the copper pipes.

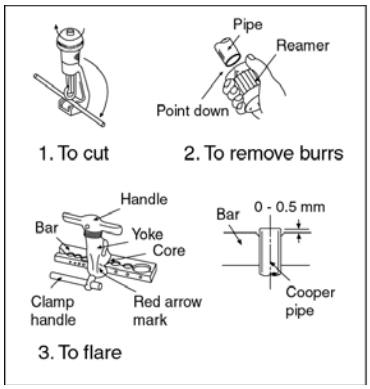

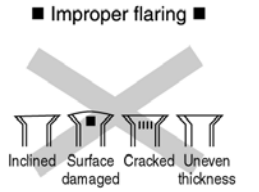

When properly flared, the internal surface of the flare will evenly shine and be of even thickness. Since the flare part comes into contact with the connections, carefully check the flare finish.

9.3.4. (a) EVACUATION OF THE EQUIPMENT (FOR EUROPE & OCEANIA DESTINATION)

WHEN INSTALLING AN AIR CONDITIONER, BE SURE TO EVACUATE THE AIR INSIDE THE INDOOR UNIT AND PIPES in the following procedure.

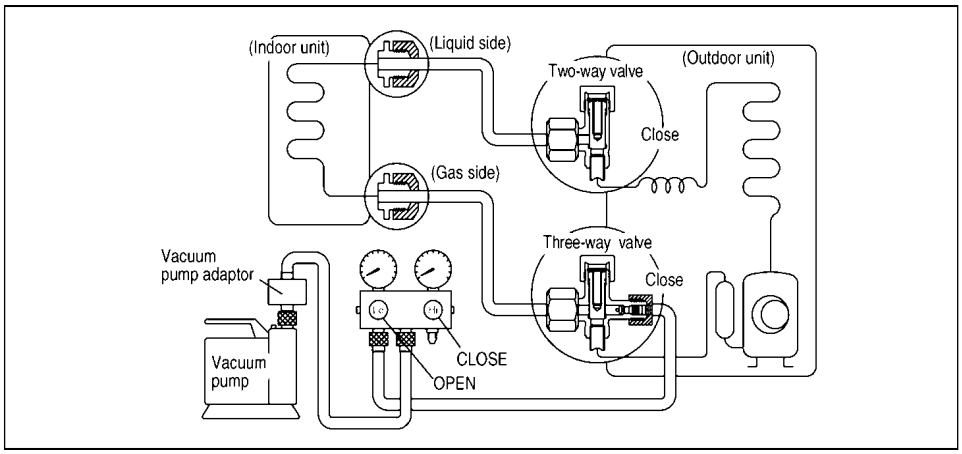

1. Connect a charging hose with a push pin to the Low side of a charging set and the service port of the 3-way valve.
   - Be sure to connect the end of the charging hose with the push pin to the service port.
2. Connect the center hose of the charging set to a vacuum pump with check valve, or vacuum pump and vacuum pump adaptor.
3. Turn on the power switch of the vacuum pump and make sure that the needle in the gauge moves from 0 cmHg (0 MPa) to -76 cmHg (-0.1 MPa). Then evacuate the air approximately ten minutes.
4. Close the Low side valve of the charging set and turn off the vacuum pump. Make sure that the needle in the gauge does not move after approximately five minutes.

   Note: BE SURE TO FOLLOW THIS PROCEDURE IN ORDER TO AVOID REFRIGERANT GAS LEAKAGE.
5. Disconnect the charging hose from the vacuum pump and from the service port of the 3-way valve.
6. Tighten the service port caps of the 3-way valve at torque of 18 N.m with a torque wrench.
7. Remove the valve caps of both of the 2-way valve and 3-way valve. Position both of the valves to "OPEN" using a hexagonal wrench (4 mm).
8. Mount valve caps onto the 2-way valve and the 3-way valve.
   - Be sure to check for gas leakage.

CAUTION
- If gauge needle does not move from 0 cmHg (0 MPa) to -76 cmHg (-0.1 MPa), in step 3 above take the following measure:
- If the leak stops when the piping connections are tightened further, continue working from step 3.
- If the leak does not stop when the connections are retightened, repair the location of leak.
- Do not release refrigerant during piping work for installation and reinstallation. Take care of the liquid refrigerant, it may cause frostbite.

9.3.5. (b) AIR PURGING OF THE PIPING AND INDOOR UNIT

The remaining air in the Refrigeration cycle which contains moisture may cause malfunction on the compressor.

1. Remove the caps from the 2-way and 3-way valves.
2. Remove the service-port cap from the 3-way valves.
3. To open the valve, turn the valve stem of 2-way valve counter-clockwise approx. 90° and hold it there for ten seconds, then close it.
4. Check gas-leakage of the connecting portion of the pipings.
   For the left pipings, refer to item 4(A).
5. To open 2-way valve again, turn the valve stem counter-clockwise until it stops.

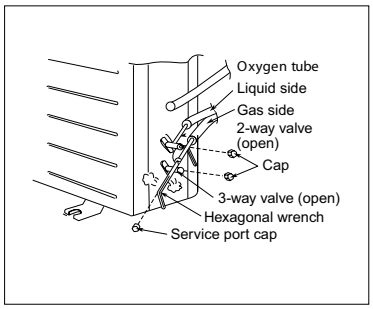

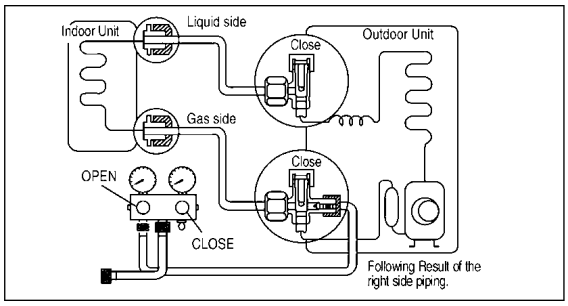

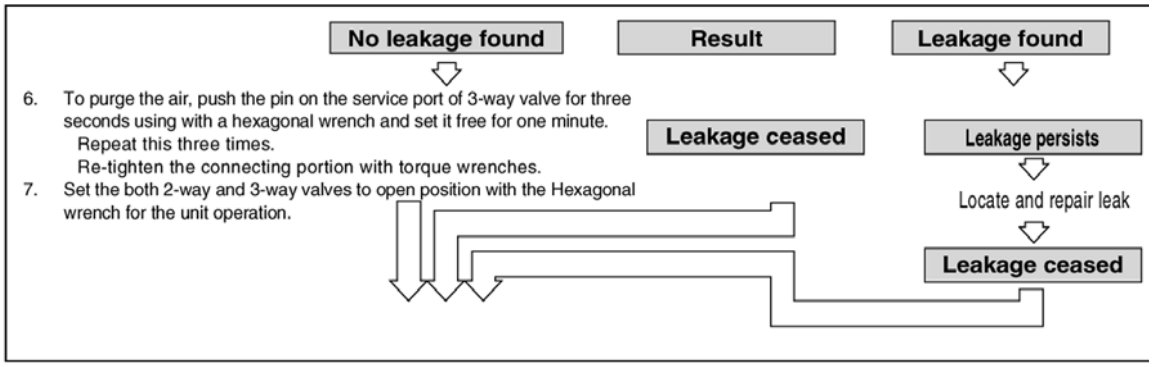

4(A). Checking gas leakage for the left piping.

(1) * Connect the manifold gauge to the service port of 3-way valve.
* Measure the pressure.

(2) * Keep it for 5-10 minutes.
Ensure that the pressure indicated on the gauge is the
* same as that of measured during the first time.

9.3.6. CONNECT THE CABLE TO THE OUTDOOR UNIT

1. Remove the control board cover from the unit by loosening the screw.
2. Connecting cable between indoor unit and outdoor unit shall be approved polychloroprene sheathed 6 x 1.5 mm^2 flexible cord, type designation 245 IEC 57 or heavier cord. The attached wird 6 with two connectors should be applied.

Terminals on the indoor unit	1(L)	2(N)	3	4	5
Color of wires					
Terminals on the outdoor unit	1(L)	2(N)	3	4	5

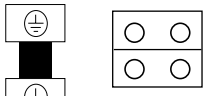

Connector

3. Secure the cable onto the control board with the holder (clamper).
4. Attach the control board cover back to the original position with the screw.

9.3.7. PIPE INSULATION

1. Please carry out insulation at pipe connection portion as mentioned in Indoor/Outdoor Unit Installation Diagram. Please wrap the insulated piping end to prevent water from going inside the piping.
2. If drain hose or connecting piping is in the room (where dew may form), please increase the insulation by using POLY-E FOAM with thickness 6 mm or above.

DISPOSAL OF OUTDOOR UNIT DRAIN WATER

- If a drain elbow is used, the unit should be placed on a stand which is is taller than 3 cm.
- If the unit is used in an area where temperature falls below 0ºC for 2 or 3 days in succession, it is recommended not to use a drain elbow, for the drain water freezes and the fan will not rotate.

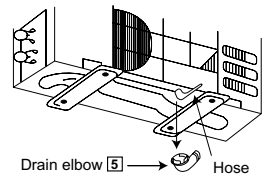

Install the hose at an angle so that the water smoothly flows out.

CHECK THE DRAINAGE

- Open front panel and remove air filters.
  (Drainage checking can be carried out without removing the front grille.)
- Pour a glass of water into the drain tray-styrofoam.
- Ensure that water flows out from drain hose of the indoor unit.

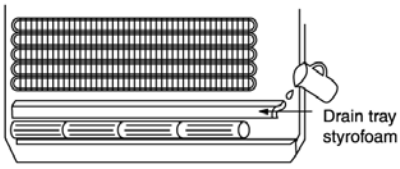

EVALUATION OF THE PERFORMANCE

- Operate the unit for fifteen minutes or more.
- Measure the temperature of the intake and discharge air.
- Ensure the difference between the intake temperature and the discharge is more than 8°C during Cooling operation or more than 14°C during Heating operation.

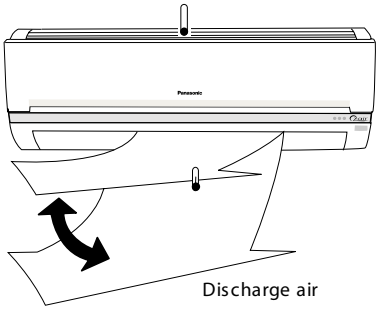

NOTE:
These equipment shall be connected to a suitable mains network with a main impendance less than: XA9DKD:0.30Ω, XA12DKD: 0.27Ω.

CHECK ITEMS

- ☐ Is there any gas leakage at flare nut connections?
- ☐ Has the heat insulation been carried out at flare nut connection?
- ☐ Is the connecting cable being fixed to terminal board firmly?
- ☐ Is the connecting cable being clamped firmly?
- ☐ Is the drainage OK?
  (Refer to "Check the drainage" section)
- ☐ Is the earth wire connection properly done?
- ☐ Is the indoor unit properly hooked to the installation plate?
- ☐ Is the power supply voltage complied with rated value?
- ☐ Is there any abnormal sound?
- ☐ Is the cooling operation normal?
- ☐ Is the thermostat operation normal?
- ☐ Is the remote control's LCD operation normal?
- ☐ Is the air purifying filter installed?

9.3.8. OXYGEN TUBE CONECTION

■ Precautions during oxygen tube connection

1. Tube allowable length and height difference is the same as pipes.
2. Tube should be pulled without folding it along the path of refrigerant pipe, providing sufficient allowance and cut to length.
3. When the tube is passed through the pipe hole, it should not form the inner wall of the pipe bends.
   The tube may be pressed to the corner of the hold and crushed.
4. Cutting of tube should be done with cutter or knife, cutting surface should be straight and even.
   Finishing should be done and leave no scratches behind.
5. Tube end's last 15 mm (the section to be inserted to the joint during connection) should be free from any damages.
6. Take note that the inside of tube should be free from stones, dirt, dust, and other impurities.

■ Oxygen tube connection

- Insert oxygen tube 7 into the joint section of indoor unit till it fully reaches its limit (about 15 mm). (Refer to Fig.A)
- Insert into the joint of outdoor unit in the same manner (Refer to Fig.B)
- If the insert does not fully reach the limit, oxygen may leak out from the joint causing abnormal noise.
- In both indoor and outdoor unit, the tube inserted will be locked inside the joint by the stopper, and the job is complete.
  To make sure that it's done properly, pull out lightly to check if can be removed.

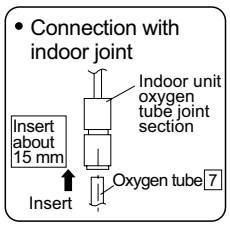

Fig.A

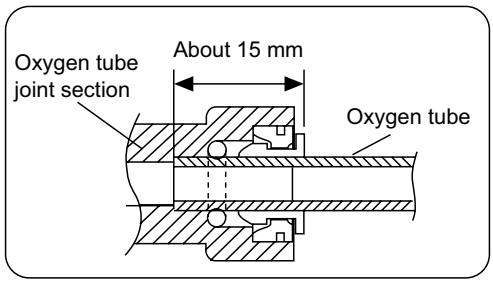

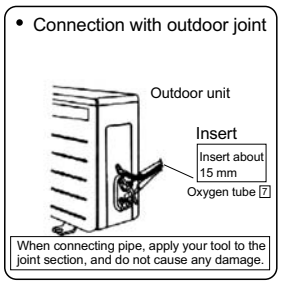

Fig.B

※Removing oxygen tube

- While pressing the release bush of joint section in the arrow direction as shown on the right, pull out the tube. (The same for indoor and outdoor unit)
- When reusing tube that has been pulled out, cut the tube end by 15 mm before reuse.
  (If the tube is damaged during pull out, it may cause oxygen leakage .)

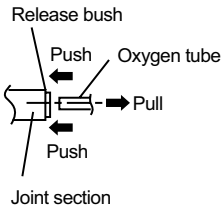

Note :
When connecting the oxygen tube 7, wrap the part close to the outdoor unit with the insulating aleeve 8 and the joint with the insulating material 9 to prevent the moisture inside the tube from cindending.

■ Connection check

- Do connection check after normal running of cooling has been confirmed during trial operation.
  (You cannot do proper oxygen tube connection check before normal running has been confirmed during trial operation.)
- Operate according to the sequence listed below, and check tube connection.
  1. Open the cap (1) to check.(Refer to the figure on Page 29)
  2. Put your ear close to the window to listen if there is oxygen flowing out (a shuuuu sound). If it's hard to hear , push the cap (2) in the window with your finger, then release your finger. The sound of flow will be louder and easier to tear.
     (If there is no air release, the cause may be tube collapse, or the insert at join section not proper. Check again and make correction if found not properly done.)
  3. After checking, make sure that you push down the cap (1) and return to its original position.(If it is not returned to its position, it may cause abnormal noise.)

■ Finishing

- Finishing should be carried out for pipe and drain hose.
  Refer to Pipe insulation of outdoor unit.

10 2-way,3-way Valve

	2-way Valve (Liquid Side)	3-way Valve (Gas Side)	
	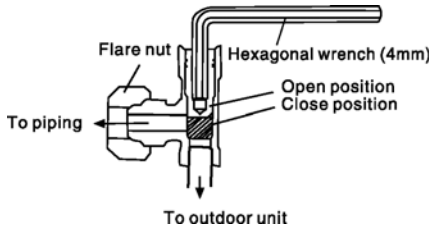	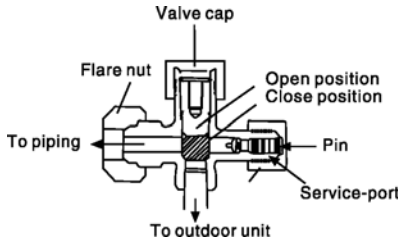	
Works	Shaft Position	Shaft Position	Service Port
Shipping	Close (With valve cap)	Closed (With valve cap)`	Closed (With cap)
Air purging(Installation and Re-installation)	Open (Counter-clockwise)	Closed (clockwise)	Open (Push-pin)
Operation	Open (Counter-clockwise)	Open (With valve cap)`	Closed (With cap)
Pumping down (Transferring)	Closed (Clockwise)	Open (Counter-clockwise)	Open (Connected manifold gauge)
Evacuation (Servicing)	Open	Open	Open (With vacuum pump)
Charging (Servicing)	Open	Open	Open (With charging cylinder)
Pressure check (Servicing)	Open	Open	Open (Connected manifold gauge)
Gas releasing (Servicing)	Open	Open	Open (Connected manifold gauge)

10.1. Evacuation of Installation

When installing an air conditioner, be sure to evacuate the air inside the indoor unit and pipes in the following procedure.

Required tools:

Hexagonal wrench, adjustable wrench, torque wrench, wrench to hold the joints, gas leak detector, charging set and vacuum pump.

The air in the indoor unit and in the piping must be purged. If air remains in the refrigeration piping, it will affect the compressor , reduce cooling capacity, and could lead to a malfunction.

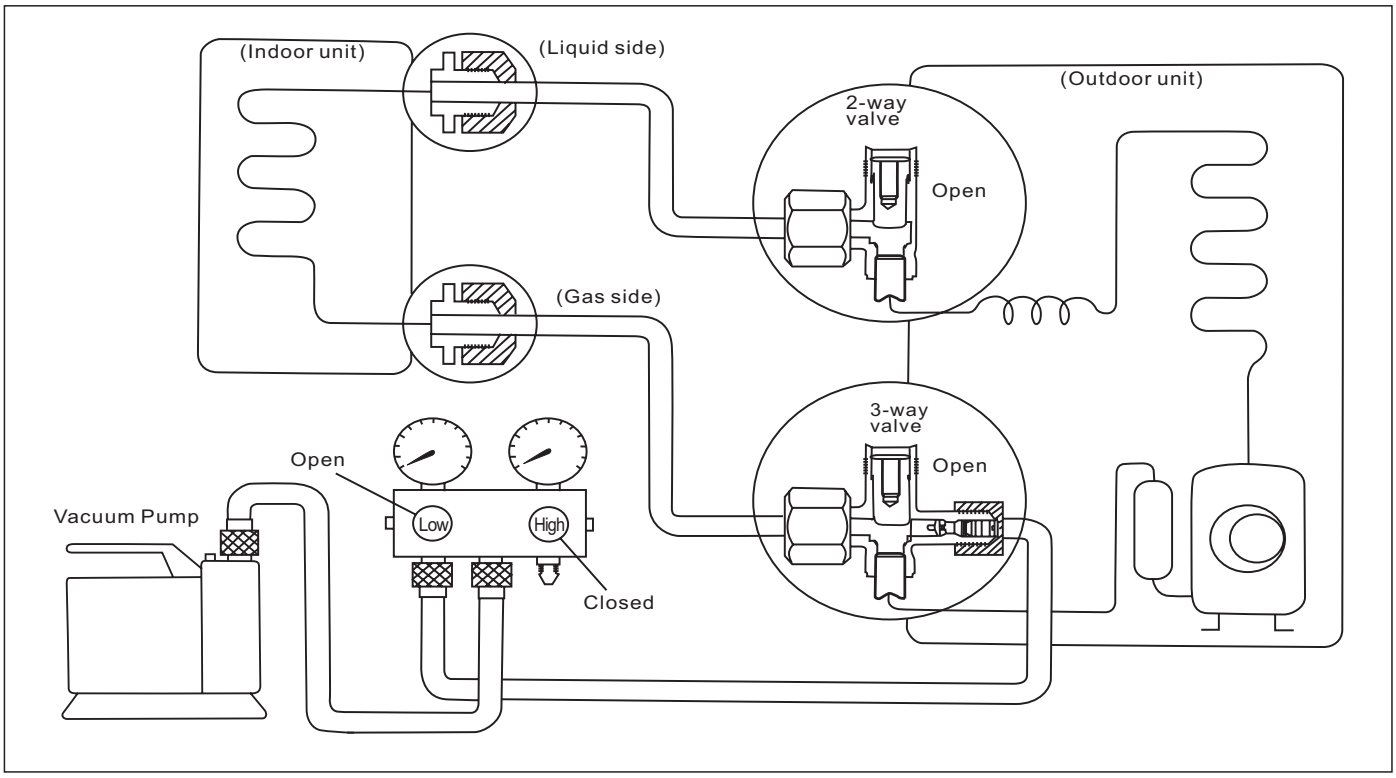

Service port cap

Be sure, using a torque wrench to tighten the service port cap(after using the service port),so that it prevents the gas leakage from the refrigeration cycle.

Procedure:

1. **Connect a charging hose with a push pin to the Low side of a charging set and the service port of the 3-way valve.**
   Be sure to connect the end of the charging hose with the push pin to the service port.
2. **Connect the centre hose of the charging set to a vacuum pump.**
3. **Turn on the power switch of the vacuum pump and make sure that the needle in the gauge moves from 0 cmHg (0 Mpa) to -76 cmHg (-0.1 Mpa). Then evacuate the air for approximately 10 minutes.**
4. **Close the valve of the Low side of the charging set and turn off the vacuum pump. Make sure that the needle in the gauge does not move after approximately 5 minutes.**
   BE SURE TO TAKE THIS PROCEDURE IN ORDER TO AVOID GAS REFRIGERANT LEAKAGE.
5. **Disconnect the charging hose from the vacuum pump and from the service port of the 3-way valve.**
6. **Tighten the service port caps of both the 3-way valve and the 2-way valve at a torque of18 N.m with a torque wrench.**
7. **Remove the valve caps of both the 3-way and the 2-way valves.**
   Position both of the valves to “open” using a hexagonal wrench (4 mm).
8. **Mount valve caps onto both of the 3-way valve and the 2-way valve.**

Be sure to check for gas leakage.

Caution

If gauge needle does not move from 0 cmHg(0 Mpa) to -76cmHg (-0.1MPa) in step (3) above, take the following measures:
If the leaks stop when the piping connections are tightened further, continue working from step (3).
If the leaks do not stop when the connections are retightened, repair the location of the leak.

10.2. Pumping down

(For Re-Installation)

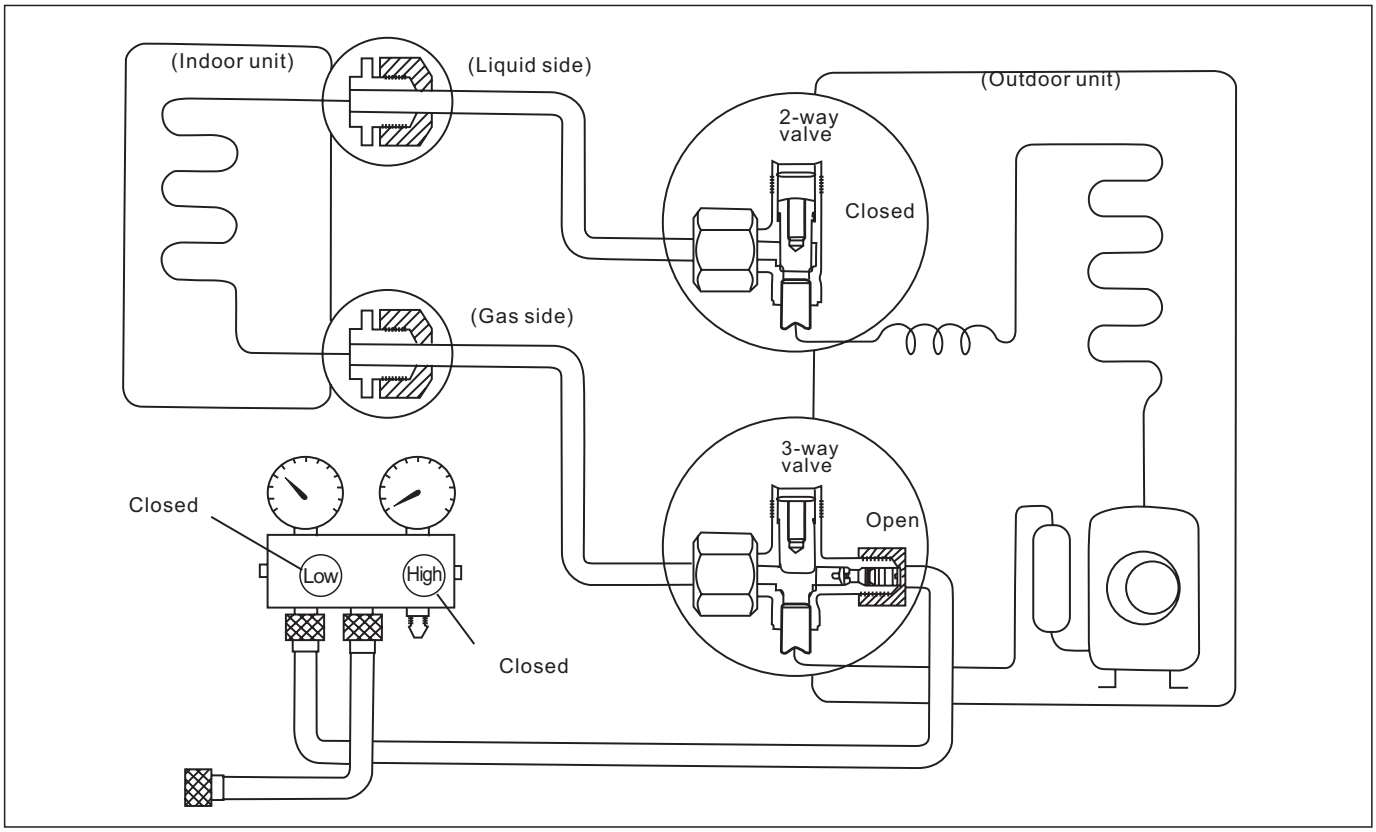

Procedure

1.Confirm that both 2-way and 3-way valves are set to open positions.
- Remove the valve stem cap and confirm that the valve stems are in the open position.
- Be sure using a hexagonal wrench to operate the valve stems.

2.Operate the unit for 10-15 minutes.

3.Stop operation and wait for 3 minutes, then connect the charge set to the service port of the 3-way valve.
- Connect the charge hose with the push pin to the service port.

4.Air purging of the charge hose.
- Open the low-pressure valve of the charge set slightly to purge air from the charge hose.

5.Set the 2-way valve to the close position.

6. Operate the air conditioner at the cooling cycle and stop it when the gauge indicates 2 kg/cm^{2}G (0.1Mpa).
- If the unit cannot be operated at the cooling mode operation (weather is rather cold), short the Pumping Down pins on the Main Control P.C.B.

7. Immediately set 3-way valve to the closed position.
- Do this quickly so that the gauge ends up indicating 1 to 3kg/cm^{2}G (0.1 to 0.3 Mpa).

8. Use refrigerant reclaiming equipment to collect refrigerant from indoor unit and pipes.

9. Disconnect the charge set, and mount the 2-way and 3-way valve stem's nuts and service port cap.
- Use torque wrench to tighten the service port cap to a torque 1.8kgf.m (18N.m).
- Be sure to check for gas leakage.

10. Disconnect pipes from indoor unit and outdoor unit.

.

10.3.Re-air Purging

(Re-installation)

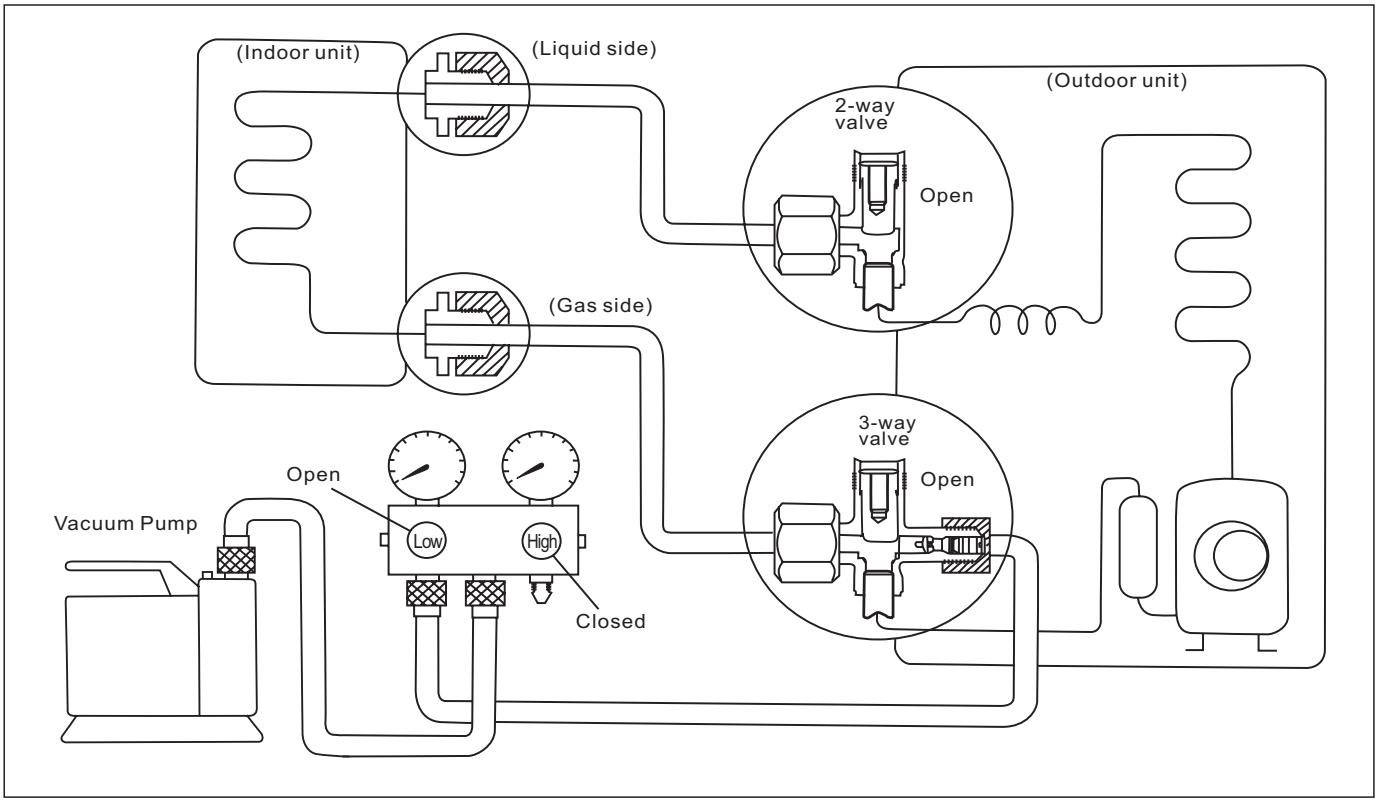

1.**Connect a charging hose with a push pin to the Low side of a charging set and the service port of a 3-way valves.**

Be sure to connect the end of the charging hose with the push pin to the service port.

2.**Connect the centre hose of the charging set to a vacuum pump.**

3.**Turn on the power switch of the vacuum pump and make sure that the needle in the gauge moves from 0 cmHg (0 Mpa) to -76 cmHg (-0.1 Mpa). Then evacuate the air for approximately 10 minutes.**

4.**Close the valve of the Low side of the charging set and turn off the vacuum pump. Make sure that the needle in the gauge does not move after approximately 5 minutes.**

BE SURE TO TAKE THIS PROCEDURE IN ORDER TO AVOID GAS REFRIGERANT LEAKAGE.

5.**Disconnect the charging hose from the vacuum pump**

6.**Charge the pipes and indoor unit with gas refrigerant from 3-way valve service port, and then discharge the refrigerant until low side (gas side) gauge needle indicates 0.3 Mpa (3 kg/cm^2).**

7.**Tighten the service port caps of both the 3-way valve and the 2-way valve at a torque of 18 N.m with a torque wrench.**

8.**Remove the valve caps of both the valves. Position both of the valves to "open" using a hexagonal wrench (4 mm).**

9.**Mount valve caps onto both the valves.**

- BE SURE TO USE REFRIGERANT RECLAIMING EQUIPMENT WHILE DISCHARGING THE REFRIGERANT.
- Purge the air from charge set's centre hose.
- Be sure to check for gas leakage.

Caution

If gauge needle does not move from 0 cmHg(0 Mpa) to -76cmHg (-0.1MPa) in step (3) above, take the following measures:
If the leaks stop when the piping connections are tightened further, continue working from step (3).
If the leaks do not stop when the connections are retightened, repair the location of the leak.

10.4. Balance refrigerant of the 2-way,3-way walves

(Gas leakage)

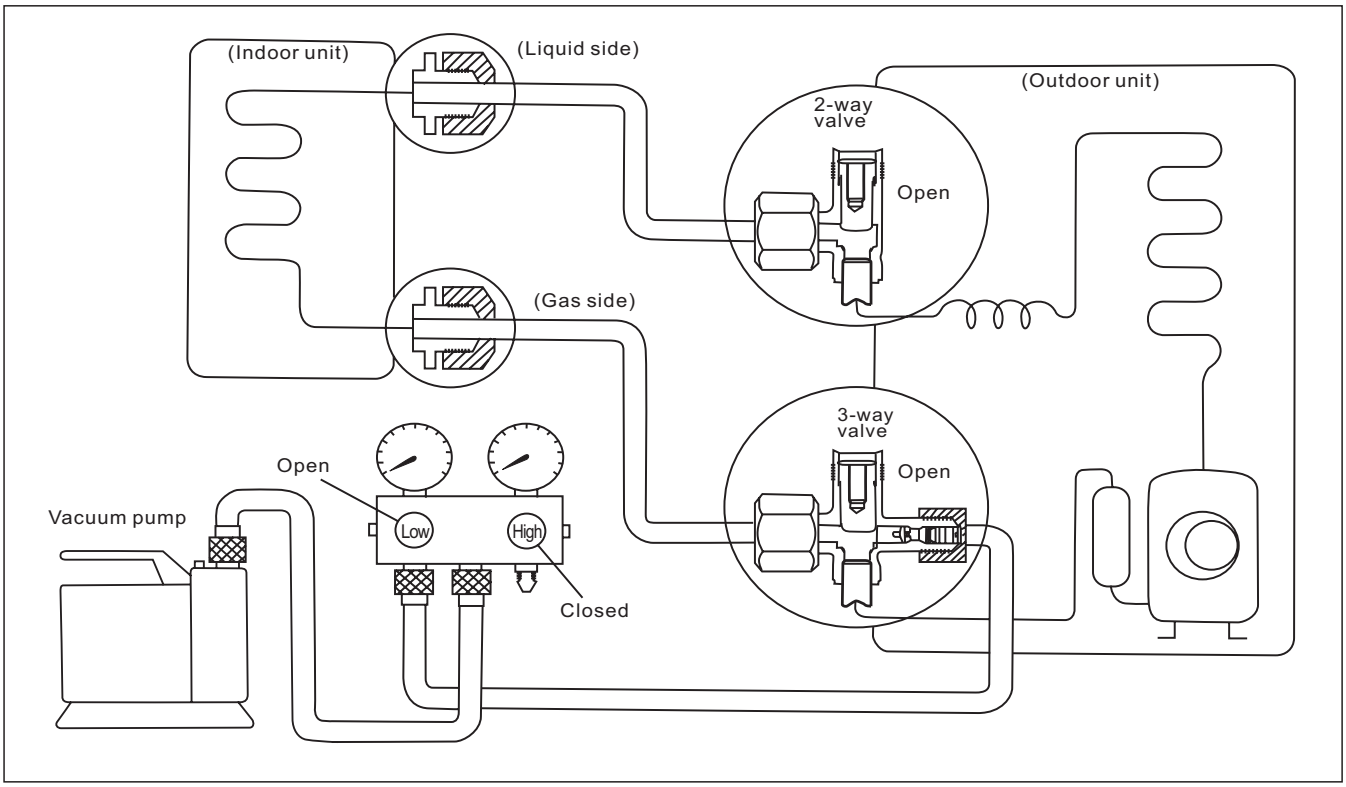

Procedure

1. **Confirm that both the 3-way valve and 2-way valve are set to the open position.**
2. **Connect the charge set to the 3-way valve's service port.**
   - Leave the valve on the charge set closed.
   - Connect the charge hose with the push-pin to the service port.
   - Confirm whether the pressure indicates more than 1 kg/cm^{2}G (0.1MPa).
3. **Connect the charge set's centre hose to refrigerant reclaiming equipment.**
4. **Open the valve (Low side) on the charge set and discharge the refrigerant until the gauge indicates 0.05 MPa (0.5 kg/cm^{2}G) to 0.1 MPa (1 kg/cm^{2}G).**
   - If there is no air in the refrigeration cycle (the pressure when the air conditioner is not running is higher than 0.1 MPa (1 kg/cm^{2}G), discharge the refrigerant until the gauge indicates 0.05 MPa (0.5 km/cm^{2}G) to 0.1 MPa (1 kg/cm^{2}G). If this is the case, it will not be necessary to apply a evacuation.
   - Discharge the refrigerant gradually; if it is discharged too suddenly, the refrigeration oil will also be discharged.
5. **Turn on refrigerant reclaiming equipment to collect the refrigerant until the needle indicates 0 (no refrigerant is remaining).**

10.5. Evacuation (Installation)

(No refrigerant in the refrigeration cycle)

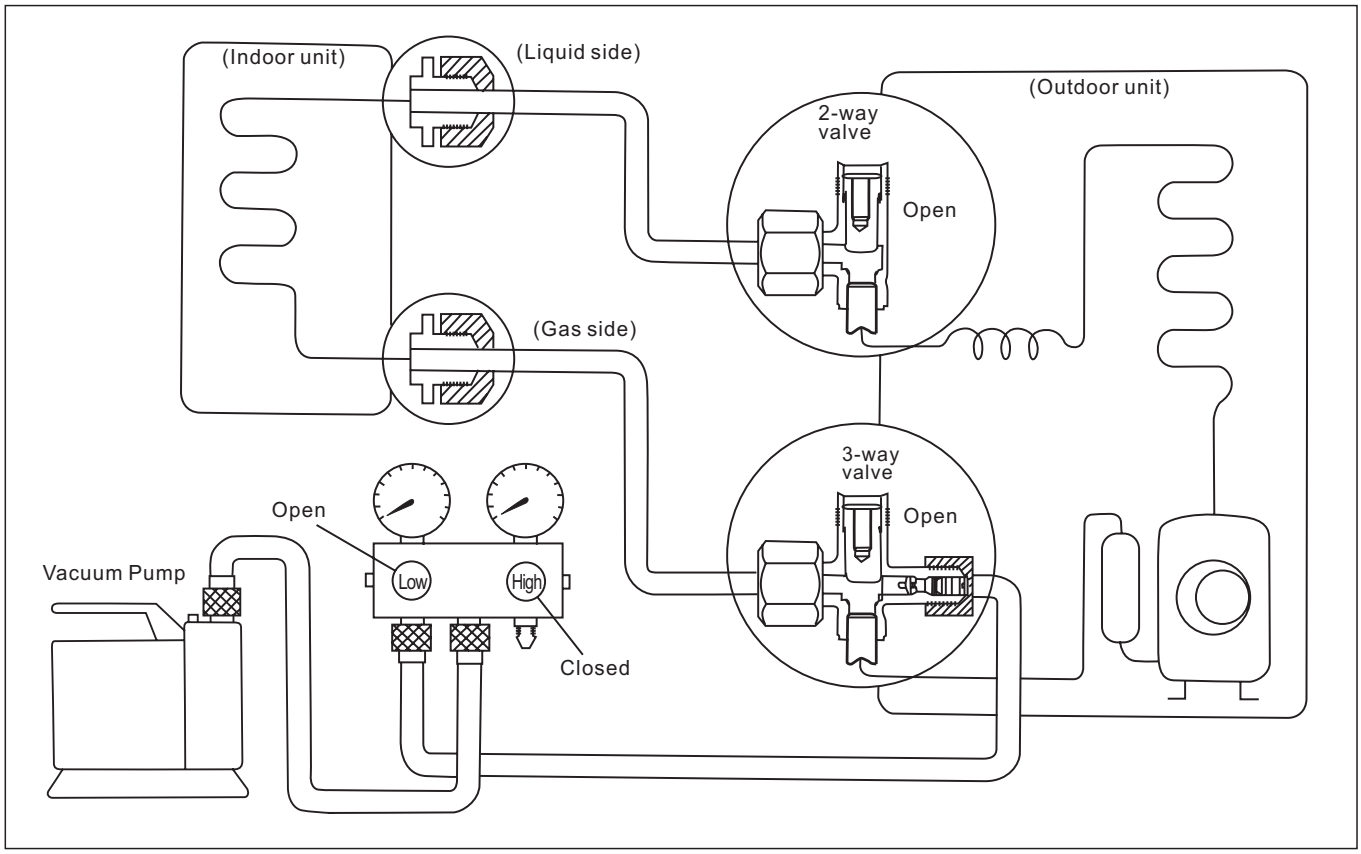

Procedure

1. **Connect the vacuum pump to the charge set's centre hose.**

2. **Evacuation for approximately 1 hour.**
   - Confirm that the gauge needle has moved toward -76cmHg (-0.1MPa) [vacuum of 4 mmHg or less].

3. **Close the valve (Low side) on the charge set, turn off the vacuum pump, and confirm that the gauge needle does not move (approximately 5 minutes after turning off the vacuum pump).**

4. **Disconnect the charge hose from the vacuum.**
   - Vacuum oil
     If the vacuum pump oil becomes dirty or depleted, replenish as needed.

10.6. Gas charging

(After Evacuation)

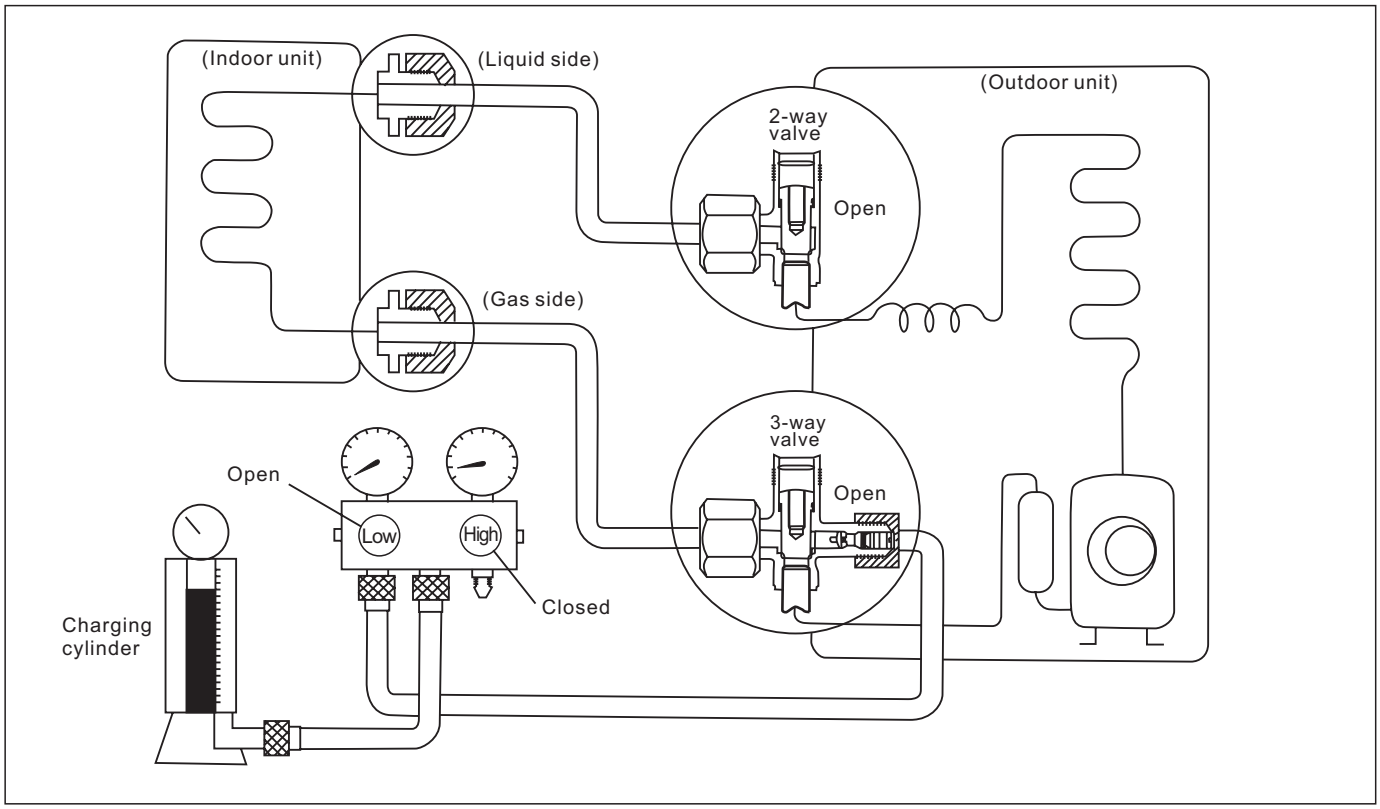

Procedure

1.Connect the charge hose to the charging cylinder.

- Connect the charge hose which was disconnected from the vacuum pump to the valve at the bottom of the cylinder.
- If you are using a gas cylinder also use a scale and reverse the cylinder so that the system can be charged with liquid.

2.Purge the air from the charge hose.

- Open the valve at the bottom of the cylinder and use a screwdriver to press the check valve on the charge set to purge the air.(Be careful of the liquid refrigerant.)
- The procedure is the same if using a gas cylinder.

3.Open the valve (Low side) on the charge set and charge the system with liquid refrigerant.

- If the system cannot be charged with the specified amount of refrigerant, it can be charge with a little at a time (approximately 150g each time) while operating the air conditioner in the cooling cycle.
  However, one time is not sufficient, wait approximately 1 minute and then repeat the procedure. (Pumping down pin)

This is different from previous procedures. Because you are charging with liquid refrigerant from the gas side, absolutely do no attempt to charge with large amount of liquid refrigerant while operating the air conditioner.

4.Immediately disconnect the charge hose from the 3-way valve's service port.

- Stopping part-way will allow the refrigerant to be discharged.
- If the system has been charged with liquid refrigerant while operating the air conditioner, turn off the air conditioner before disconnecting the hose.

5.Mount the valve stem nuts and the service port.

- Use a torque wrench to tighten the service port cap to a torque of 1.8kgf.m (18 N.m)
- Be sure to check for gas leakage.

11 Disassembly of the parts

Removal Procedure For Intake Grille

1. Open the intake grille and pull it to the horizontal position. (Fig. 1)

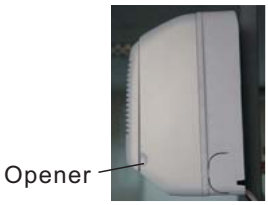

Fig. 1

2. Pull up the intake grille until it falls off.(Fig. 2)

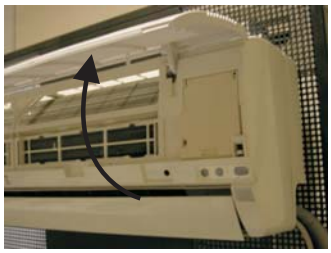

Fig. 2

Removal Procedure For Front Grille

1.Remove the two caps at the discharge port (right and left) (Fig. 3)

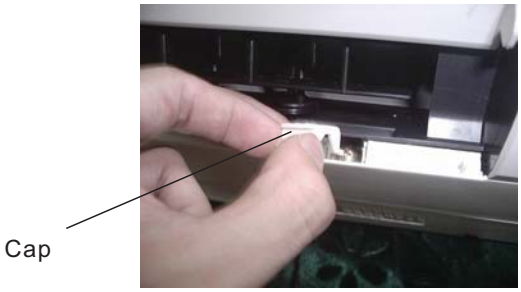

Fig. 3

2.Release the two screws under the both caps. (Fig. 4)

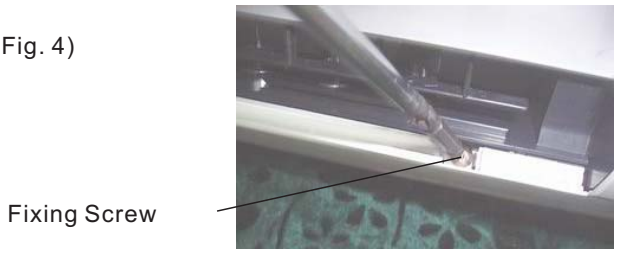

Fig. 4

3.Pull out the front grille from the unit body. (Fig.5)

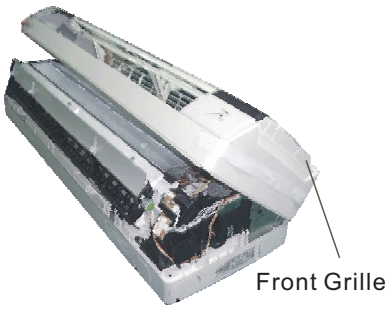

Fig. 5

Removal Procedure For Electronic Controller

1、Remove indicador complete

Afer removing the front grille, loose the screw behind the indicator, the whole indicator can be released.

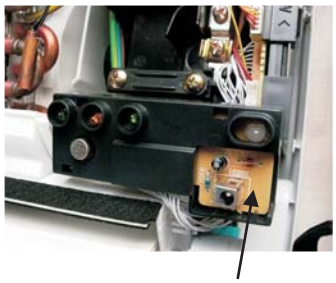

Fig 6

2、Remove the cover of control board and holder

3、Break off the earing ,release the holder slightly.
Be sure to avoid cracking of the holder.

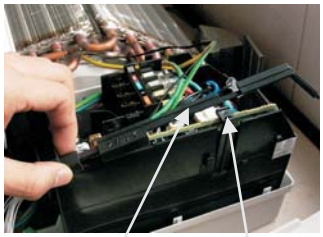

Fig 7

4. Release the lead wire CN-FM, CN-VF, CN-STM, CN-DISP and earth wire(Yellow/Green). Take out the sensor from the socket. Pull out the whole electronic controller.

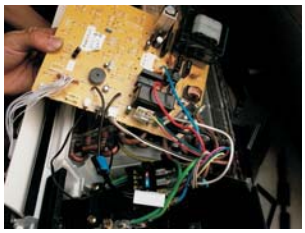

Fig 8

5. Remove the whole control board
Loose the screw s of control board,earings slightly, then the whole control board can be pulled out.

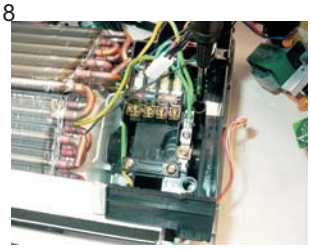

Fig 9

Removal Procedure For the Discharge Grille

1. Separate the drain hose and the drain plate(Fig.10)

Fig 10

2. Pull out the discharge grille slightly (Fig. 11)

Fig. 11

Removal Procedure For Cross Flow Fan

1. Release the two fixing screws,disassembly the fixing board from evaporator on the left side of the evaporator and pull out the whole evaporator. (Fig. 12)

Fig. 12

2.Loose the fixing screw of the cross flow fan. (Fig. 13)

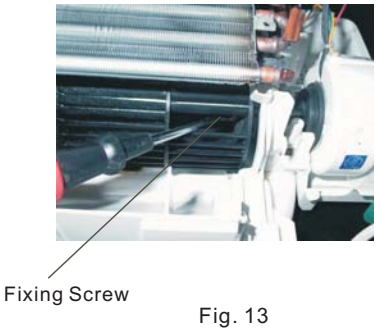

Fig. 13

3.After removing the bearing (refer to fig14) , indoor fan can be taken out from the left side.

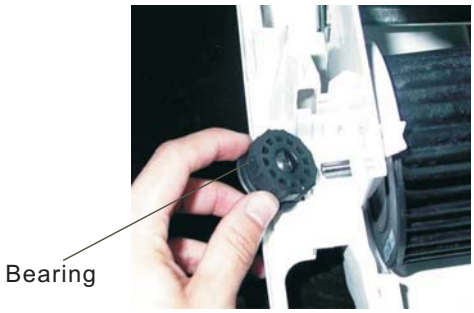

Fig 14

4. Lift up the indoor fan slightly, and then pull the fan motor out.（Fig15）

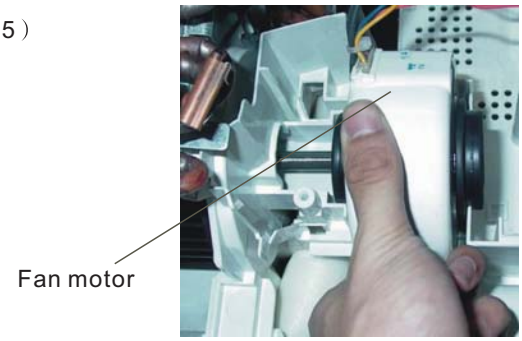

Fig 15

Remote control reset

If the display is chaotic or can not be adjusted,
Use a pin to press RESET button to reset the remote control to the original set by manufacture.

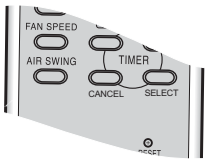

Fig 16

Replacing procedure for the Vacuum Pump Complete

1、Release the fixing screws.（Fig.17）

Fig.17

2、Pull out the connecting pipe and lead wired（fig.18）

Fig.18

3、Replacing the Vacuum Pump （Fig.19）

Fig.19

11.3.2 Replacing Oxygen Generator Filter

1、Remove the fixing tool of Oxygen Generator Filter（Fig.20）.

Fig.20

2、Pull out the connecting pipe （Fig.21）.

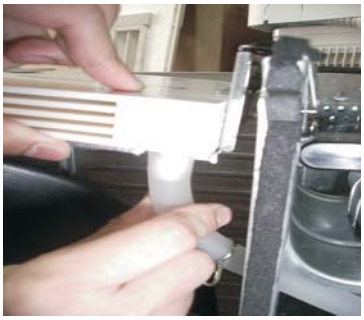

Fig.21

3、Pull out the Oxygen Generator Filter and replacing it（Fig.22）。

Fig.22

12 Troubleshooting Guide

12.1. Refrigeration cycle system

In order to diagnose malfunctions, make sure that there are no electrical problems before inspecting the refrigeration cycle. Such problems include insufficient insulation, problem with the power source, malfunction of compressor or fan.
The normal outlet air temperature and pressure of the refrigeration cycle depends on various conditions, the standard values for them are shown in the table to the right.

Normal pressure and outlet air temperature(standard)

	Gas side pressure Mpa (kg/cm^2G)	Outlet air temperature (℃)
Cooling mode	0.4~0.6(4~6)	12~16
Heating mode	1.5~2.1(15~21)	36~45

★ Condition: indoor fan speed: high
outdoor temperature:
35℃ (Cooling mode)
7℃ (Heating mode)

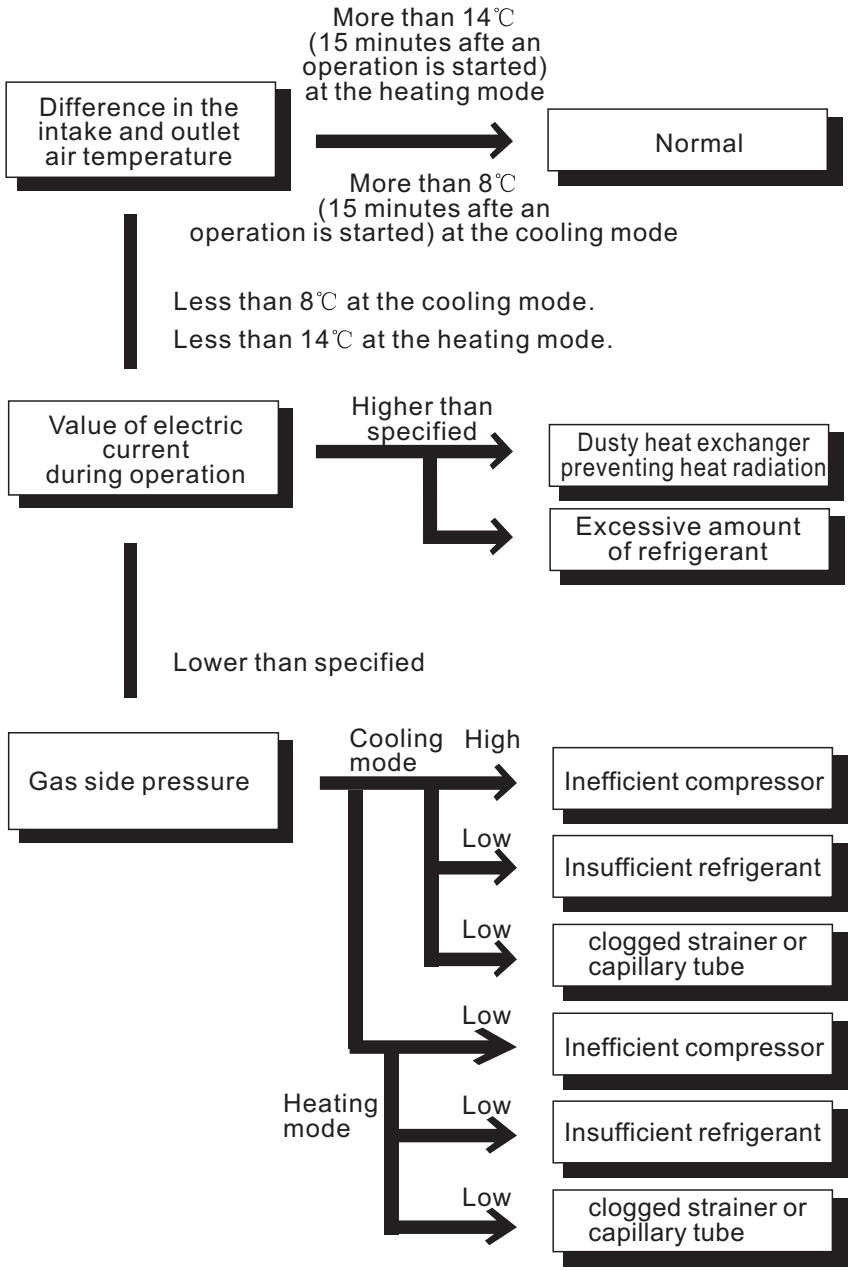

- Measuring the air temperature difference

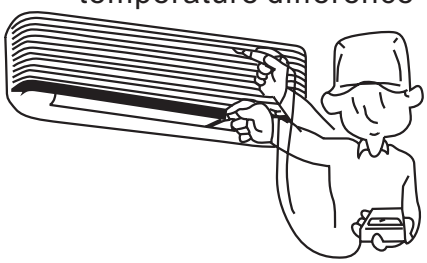

- Measuring electric current during operation

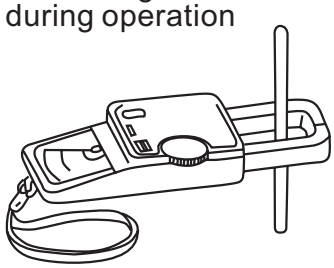

- Measuring gas side pressure

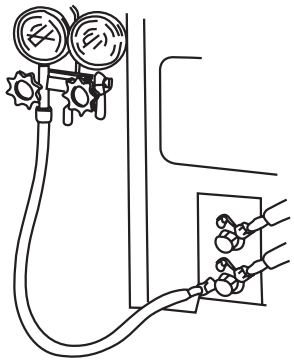

12.2. Relationship between the condition of air conditioner and pressrue and electric current

Condition of the air conditioner	Cooling mode			Heating mode		
	Low pressure	High pressure	Electric current during operation	Low pressure	High pressure	Electric current during operation
Insufficient refrigerant (gas leakage)	↘	↘	↘	↘	↘	↘
Clogged capillary tube	↘	↘	↘	↘	↘	↘
Short circuit in the indoor unit	↘	↘	↘	↗	↗	↗
Heat radiation deficiency of the outdoor unit	↗	↗	↗	↘	↘	↘
Insufficient compression	↗	↘	↘	↗	↘	↘

12.3. Diagnosis methods of a malfunction of a compressor .

Nature of fault	Symptom
Insufficient compressing of a compressor	• Electric current during operation becomes approximately 80% lower than the normal level. • The discharge tube of the compressor becomes abnormally hot (normally 70~90℃). • The difference between high pressure and low pressure becomes almost zero.
Locked compressor	• Electric current reaches a high level abnormally, and the value exceeds the limit of an ammeter. In some cases, a breaker turns off. • The compressor has a humming sound.
Inefficient switches of the 4-way valves	• Electric current during operation becomes approximately 20% lower than the normal valve. • The temperature difference between from the discharge tube to the 4-way valve and from suction tube to the 4-way valve becomes almost zero.

13 Technical Data

■ Thermostat characteristics

- Cooling mode

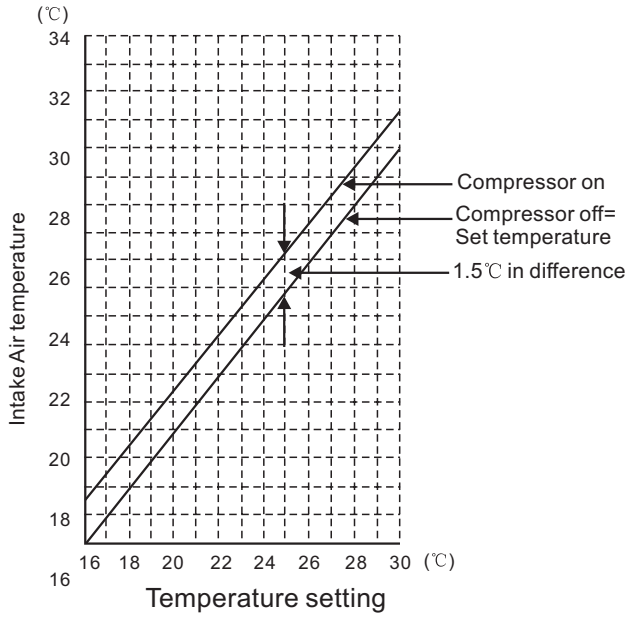

- Soft dry mode

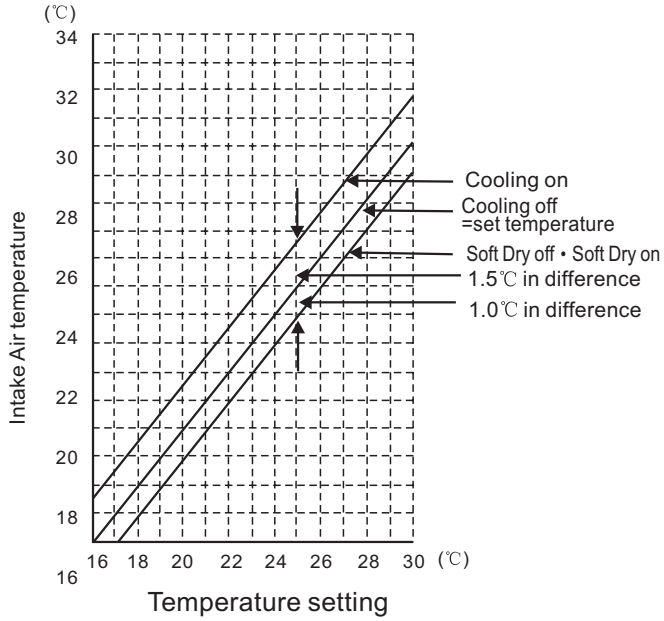

- Heating mode

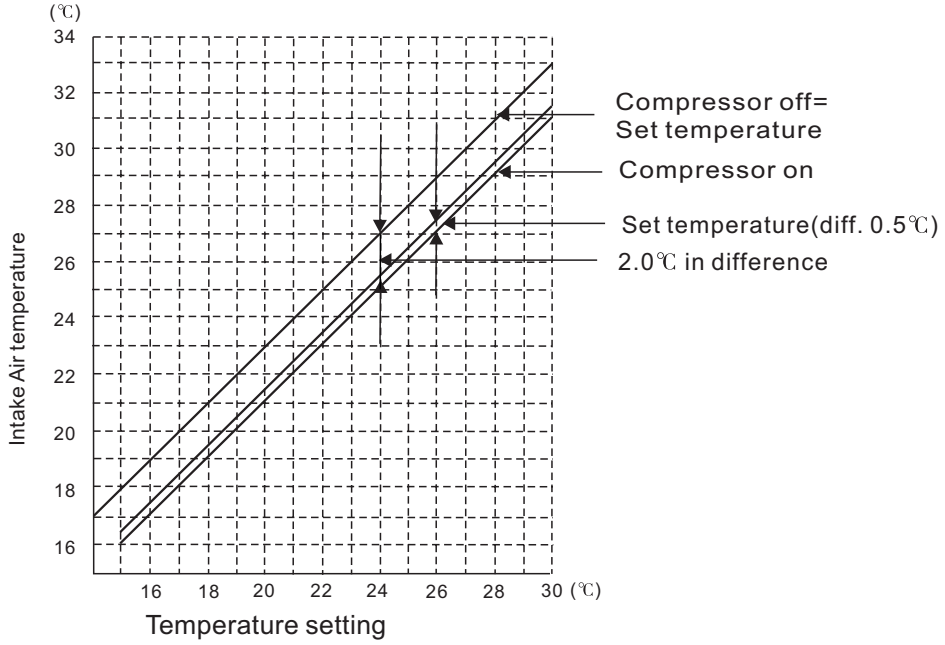

■ Cooling characteristics

● CS/CU-XA9DKD

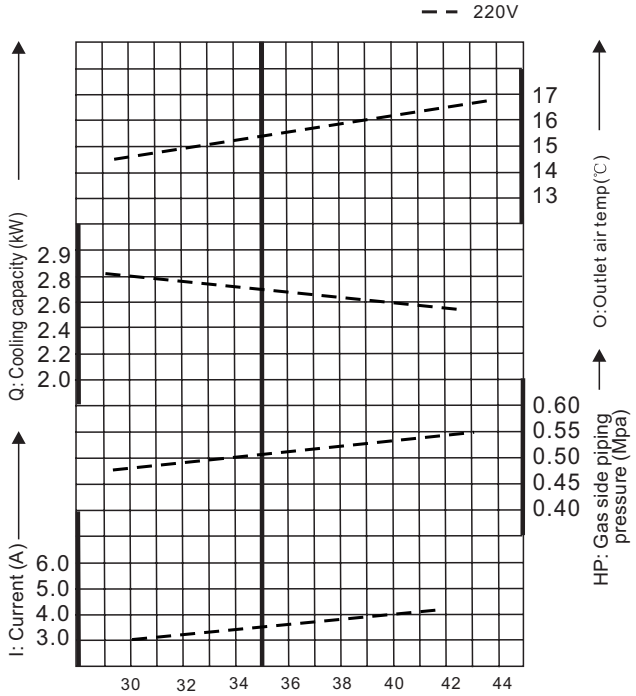

[Condition] Room temp: 27/19℃
Cooling operation: at high speed
Piping length:5m

● CS/CU-XA12DKD

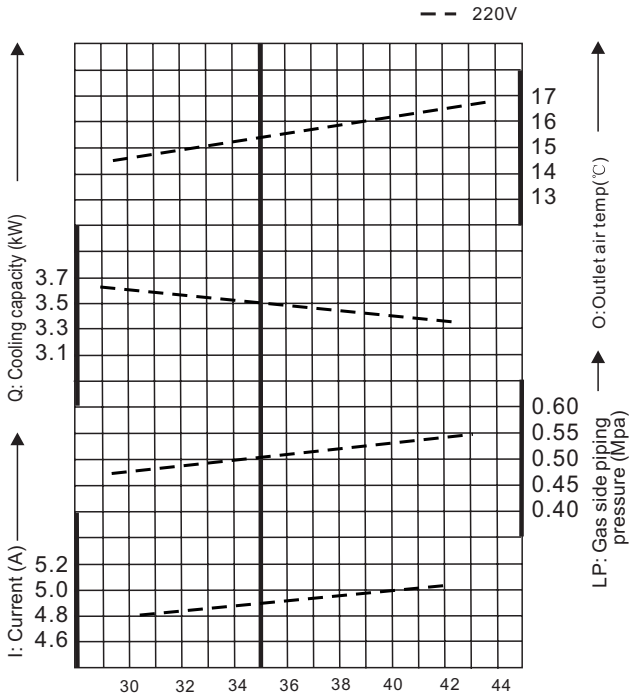

[Condition] Room temp: 27/19℃
Cooling operation: at high speed
Piping length:5m

■ Heating characteristics

● CS/CU-XA9DKD

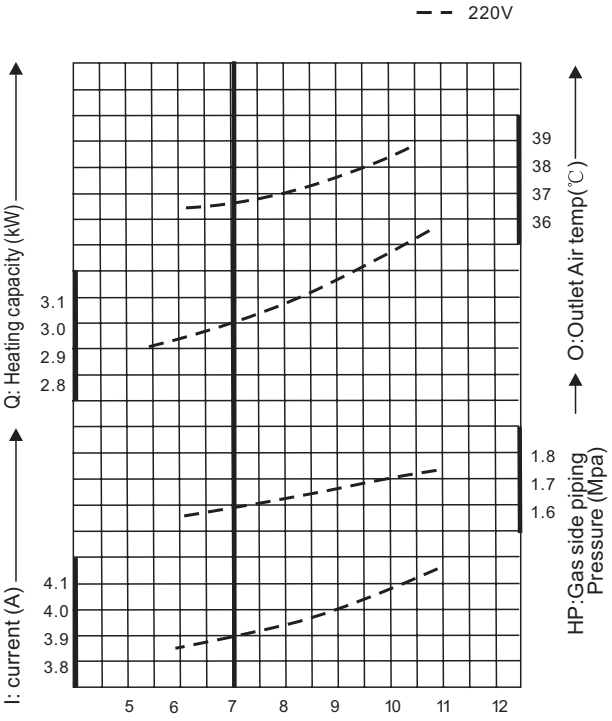

[Condition] Room temp: 27/19℃
Heating operation:at high speed
Piping length:5m

● CS/CU-XA12DKD

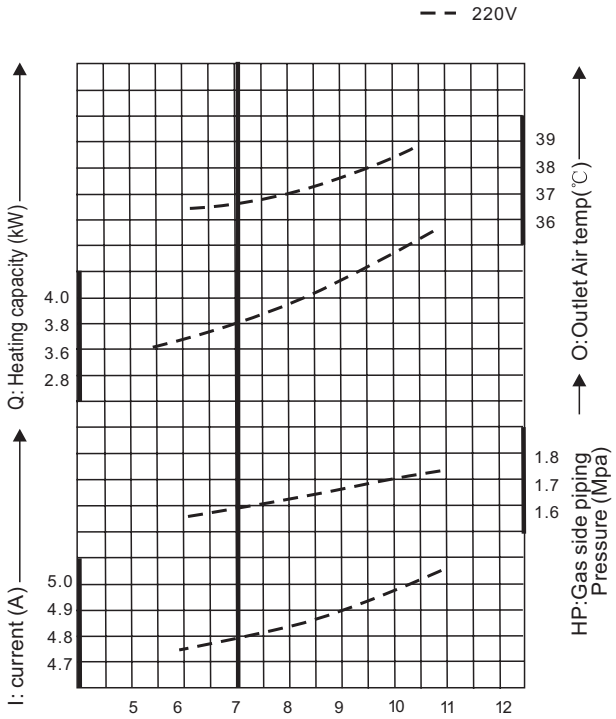

[Condition] Room temp: 27/19℃
Heating operation:at high speed
Piping length:5m

14 Exploded View

CS-XA9DKD
CS-XA12DKD

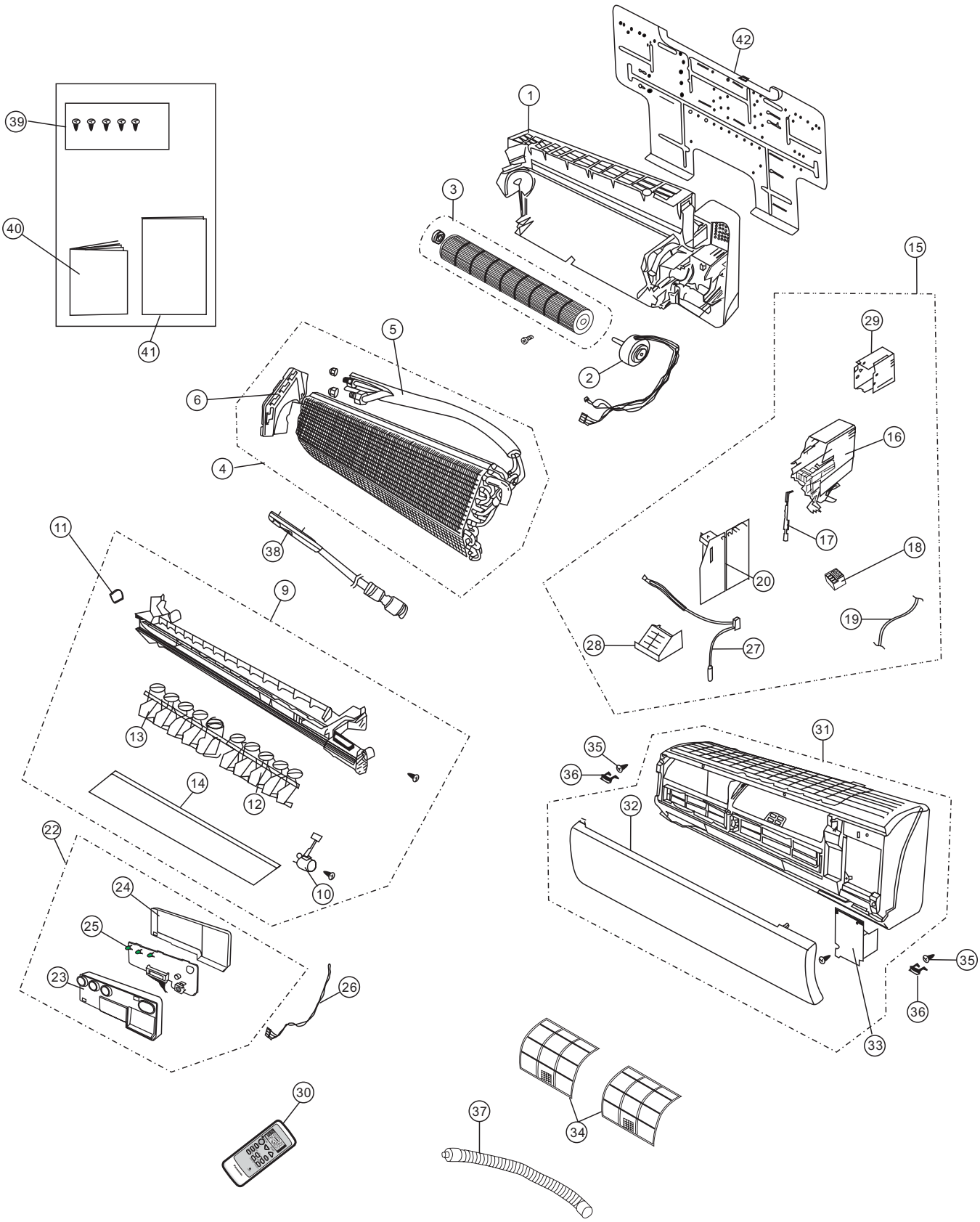

15 Replacement Parts List

CS-XA9DKD
CS-XA12DKD

No.	DESCRIPTION&NAME	Q'TY	CS-XA9DKD	CS-XA12DKD	RE
1	CHASSIS COMPLETE	1	CWD50C1423	CWD50C1423	
2	FAN MOTOR	1	CWA921116	CWA921116	
3	CROSS FLOW FAN COMPLETE	1	CWH02C1036	CWH02C1036	
4	EVAPORATOR	1	CWB30C1760	CWB30C1763	
5	TUBE ASS'Y	1	CWT01C3523	CWT01C3457	
6	FIXING BOARD	1	CWD661043	CWD661043	
9	DISCHARGE GRILLE COMPLETE	1	CWE20C2406	CWE20C2406	
10	AIR SWING MOTOR	1	CWA981091	CWA981091	
11	CAP-DRAIN TRAY	1	CWH521096	CWH521096	
12	VERTICAL VANE(RIGHT)	1	CWE24C1081	CWE24C1081	
13	VERTICAL VANE(LEFT)	1	CWE24C1082	CWE24C1082	
14	HORIZONTAL VANE	1	CWE24C1100	CWE24C1100	
15	C-BOX	1	CWH14C4732	CWH14C4733	
16	CONTROL BOARD	1	CWH102265	CWH102265	
17	HOLDER	1	CWD932493	CWD932493	
18	TERMINAL BOARD COMPLETE	1	CWA28C2235	CWA28C2235	
19	POWER SUPPLY CORD COMPLETE	1	CWA20C2448	CWA20C2448	
20	ELECTRONIC CONTROLLER	1	CWA743899	CWA743900	
22	INDICATOR COMPLETE	1	CWE39C1136	CWE39C1136	
23	INDICATOR HOLDER-FRONT	1	CWD932491	CWD932491	
24	INDICATOR HOLDER-BACK	1	CWD932492	CWD932492	
25	INDICATOR PCB	1	CWA743919	CWA743919	
26	LEAD WIRE-INDICATOR	1	CWA67C5500	CWA67C5500	
27	SENSOR	1	CWA50C2271J	CWA50C2271J	
28	CONTROL BOARD FRONT COVER	1	CWH131235	CWH131235	
29	CONTROL BOARD TOP COVER	1	CWH131237	CWH131237	
30	REMOTE CONTROL	1	CWA75C2771	CWA75C2771	
31	FRONT GRILLE COMPLETE	1	CWE11C3340	CWE11C3340	
32	INTAKE GRILLE	1	CWE22K1290	CWE22K1290	
33	GRILLE DOOR	1	CWE141073	CWE141073	
34	AIR FILTER	2	CWD001153	CWD001153	
35	SCREW-FRONT GRILLE	2	XTT4+16CFJ	XTT4+16CFJ	
36	CAP-FRONT GRILLE	2	CWH521109	CWH521109	
37	DRAIN HOSE	1	CWH851074	CWH851074	
38	BOX SHAPED PIECE COMPLETE	1	CWD76C1027	CWD76C1027	
41	OPERATING INSTRUCTIONS	1	CWF564867	CWF564867	
42	INSTALLATION INSTRUCTIONS	1	CWF612764	CWF612764	
43	INSTALLATION PLATE	1	CWH361069	CWH361069	

Note:

1.All parts are supplied from GMAC, P.R. China.

16 Exploded View

CU-XA9DKD
CU-XA12DKD

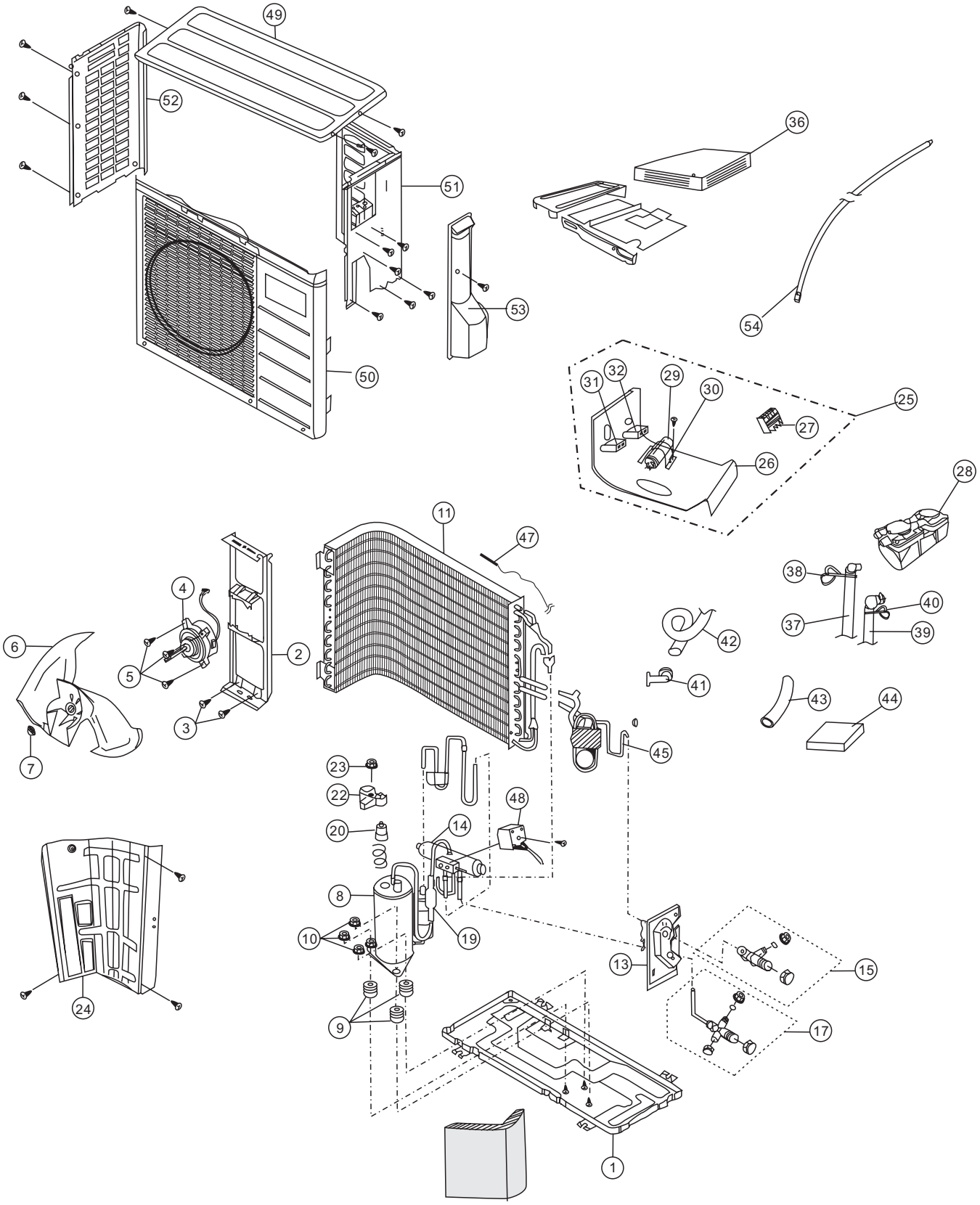

17 Replacement Parts List

CU-XA9DKD
CU-XA12DKD

No.	DESCRIPTION&NAME	Q'TY	CU-XA9DKD	CU-XA12DKD	RE
1	BASE ASS'Y	1	CWD50K2124A	CWD50K2124A	
2	HOLDER-FAN MOTOR	1	CWD541020	CWD541020	
3	SCREW-F.M. HOLDER	2	CWH551060J	CWH551060J	
4	FAN MOTOR	1	CWA951452	CWA951452	
5	FIXING SCREW-FAN MOTOR	4	CWH55406J	CWH55406J	
6	PROPELLER FAN	1	CWH03K1010	CWH03K1010	
7	NUT-P.FAN	1	CWH561036J	CWH561036J	
8	COMPRESSOR	1	CWB092329	CWB092281	
9	MOUNT RUBBER(COMP.)	3	CWH50077	CWH50077	
10	NUT-COMP.MOUNT	3	CWH561047A	CWH561047A	
11	CONDENSER	1	CWB32C1555P	CWB32C1555P	
13	HOLDER-COUPLING	1	CWH351017	CWH351017	
15	2-WAY VALVE	1	CWB021247	CWB021247	
17	3-WAY VALVE	1	CWB011301	CWB011312	
20	O.L.P. COMPLETE	1	CWA67C5481	CWA67C5410	
22	TERMINAL COVER	1	CWH17006	CWH17006	
23	NUT-TERNINAL COVER	1	7080300J	7080300J	
24	SOUND PROOF BOARD	1	CWH151103	CWH151103	
25	CONTROL BOX COMPLETE	1	CWH14C4447	CWH14C4447	
26	CONTROL BOARD	1	CWH102267	CWH102267	
27	TERMINAL BOARD ASS'Y	1	CWA28K1153	CWA28K1153	
28	VACUUM PUMP	1	CWB532048	CWB532048	
29	CAPACITOR(COMPRESSOR)	1	DS371306CPXC	DS371306CPXC	
30	CAPACITOR HOLDER	1	CWH30165	CWH30165	
31	CAPACITOR (FAN MOTOR)	1	CWA312150	CWA312150	
32	CAPACITOR (VACUUM PUMP)	1	DS441125XPQC	DS441125XPQC	
36	OXYGEN FILTER COMPLETE	1	CWD07C0002	CWD07C0002	
37	OXYGEN TUBE(IN)	1	CWH851081	CWH851081	
38	TUBE CLIP	1	CWH881047J	CWH881047J	
39	OXYGEN TUBE(OUT)	1	CWH85C1027	CWH85C1027	
40	TUBE CLIP	1	CWH881048J	CWH881048J	
41	TUBE JOINT	1	CWT29C1021	CWT29C1021	
42	OXYGEN TUBBE	1	CWH85C1015	CWH85C1015	
43	HEATPROOF SLEEVE PIPE	1	Q3P8-200	Q3P8-200	
44	INSULATION MATERIAL	1	E5A50-100	E5A50-100	
45	TUBE ASS'Y(CAPILLARY)	1	CWT01C3499	CWT01C3410	
47	SENSOR(PIPNG)	1	CWA50C2264	CWA50C2264	
48	V-COIL COMPLTE	1	CWA43C2176	CWA43C2176	
49	SURFACE COVER	1	CWE03C1033	CWE03C1033	
50	CABINET FRONT PLATE	1	CWE06C1116	CWE06C1116	
51	CABINET SIDE PLATE(R)	1	CWE041148A	CWE041148A	
52	CABINET SIDE PLATE(L)	1	CWE041118A	CWE041118A	
53	CONTROL BOARD COVER	1	CWH13C1108	CWH13C1108	
54	CONNECTING WIRED-SENSOR	1	CWA22C1022	CWA22C1022	

Note:

All parts are supplied from GMAC, P.R. China.

18 Electronic Circuit Diagram

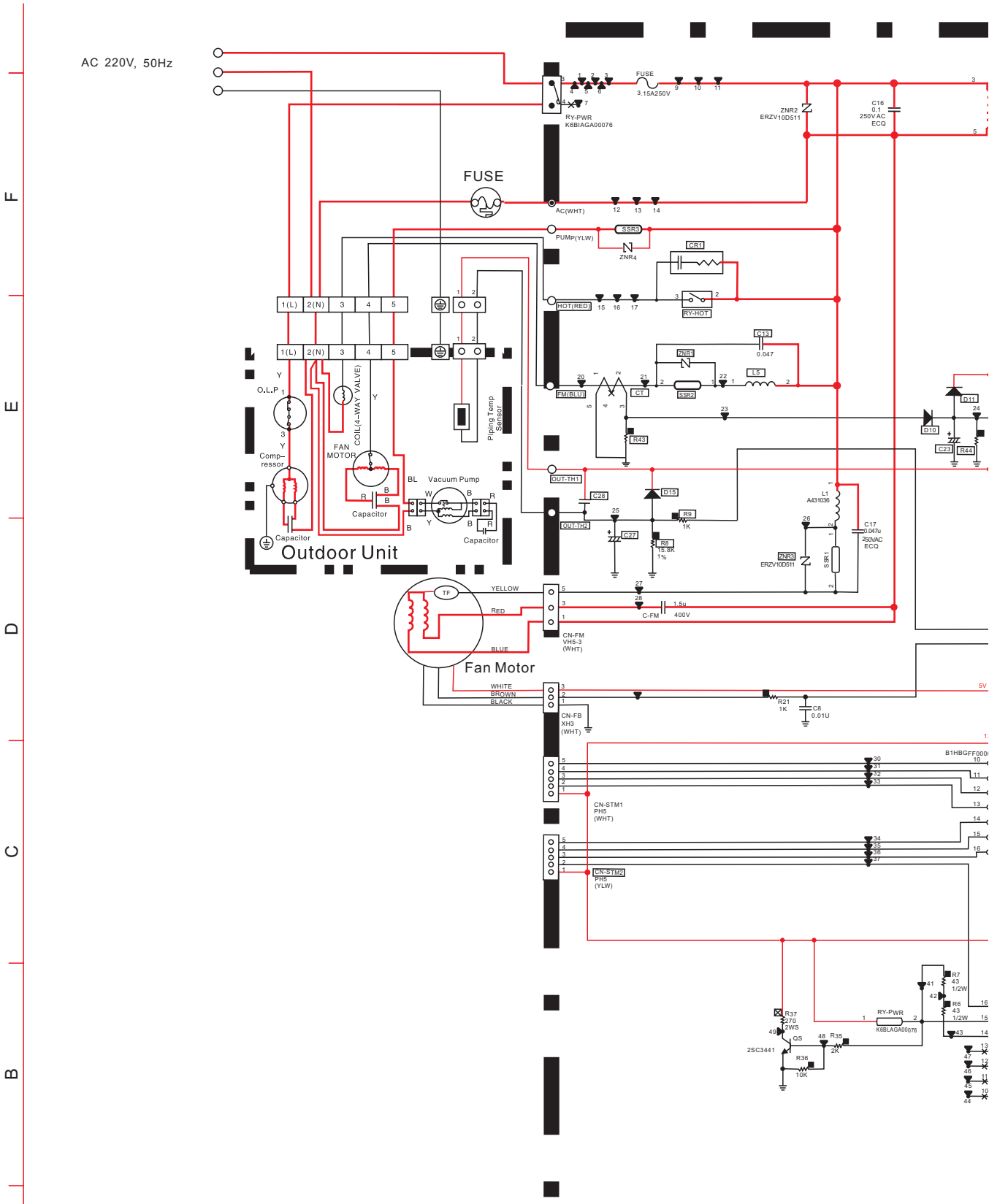

TABLE 2

NUMBER	JP1	JP2	Rx
0	JUMPER	JUMPER	———
1	JUMPER	NONE	———
2	NONE	NONE	10K
3	JUMPER	NONE	10K

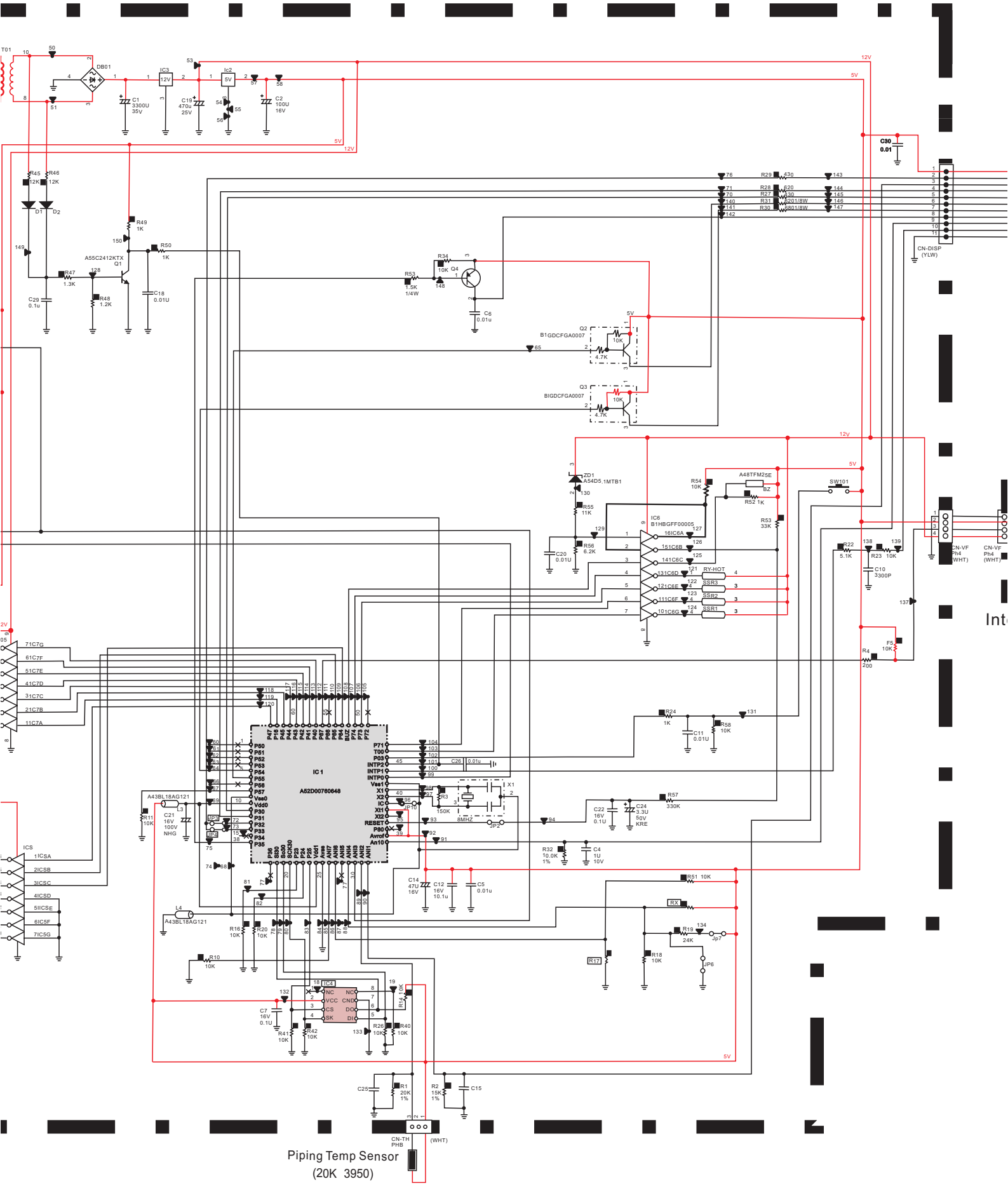
T01
DB01
IC3 12V
Ic2 5V
C1 3300U 35V
C19 470u 25V
C2 100U 16V
12V
5V
C30 0.01
R45 12K
R46 12K
D1
D2
R49 1K
R50 1K
A55C2412KTX Q1
R47 1.3K
R48 1.2K
C29 0.1u
C18 0.01U
R53 1.5K 1/4W
R34 10K
Q4
C6 0.01u
Q2 B1GDCFGA0007
Q3 BIGDCFGA0007
R29 430
R28 820
R27 330
R31 6201/8W
R30 6801/8W
CN-DISP (YLW)
ZD1 A54D5.1MTB1
R55 11K
R56 6.2K
C20 0.01U
R54 10K
A48TFM25E
BZ
R52 1K
R53 33K
SW101
IC6 B1HBGFF00005
RY-HOT
SSR3
SSR2
SSR1
R22 5.1K
R23 10K
C10 3300P
CN-VF Ph4 (WHT)
R4 200
F5 10K
R24 1K
C11 0.01U
R58 10K
IC 1
A52D00760648
A43BL18AG121
C21 16V 100V NHG
R11 10K
8MHZ
X1
R3 150K
C28 0.01u
R57 330K
C22 16V 0.1U
C24 3.3U 50V KRE
R32 10.0K 1%
C4 1U 10V
C14 47U 16V
C12 16V 10.1u
C5 0.01u
R51 10K
RX
R19 24K
R18 10K
R17
JP6
R16 10K
R20 10K
R10 10K
IC4
C7 16V 0.1U
R41 10K
R42 10K
R26 10K
R40 10K
R14 10K
C25
R1 20K 1%
R2 15K 1%
C15
CN-TH PHB
(WHT)
Piping Temp Sensor
(20K 3950)
71C7G
61C7F
51C7E
41C7D
31C7C
21C7B
11C7A
ICS
1ICSA
2ICSB
3ICSC
4ICSD
5IICSE
6IC5F
7IC5G

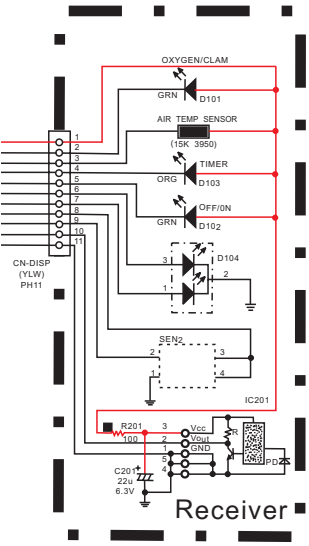

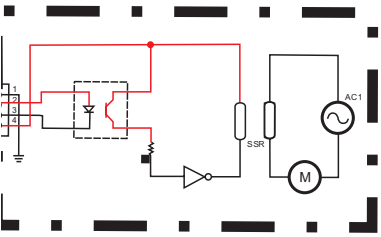

erlocking Ventilator Unit(Optional)

TABLE1

REMARK	CS/CU-XA9DKD	CS/CU-XA12DKD
CODE N0.	A743899	A743900
C13	ECQU2A473A05	ECQU2A473A05
C23	NONE	NONE
C27	ECA1CHG101B	ECA1CHG101B
C28	ECJIVF1A105Z	ECJIVF1A105Z
CR1	JOHBJY000004	JOHBJY000004
CN-STM2	NONE	NONE
CT	NONE	NONE
D10	NONE	NONE
D11	NONE	NONE
D15	BOACCK000005	BOACCK000005
FM(BLU)	A67C4824	A67C4824
HOT(RED)	A67C4825	A67C4825
JP3	NONE	NONE
JP4	5.0mm	5.0mm
L5	A431090	A431090
OUT-TH1 OUT-TH2	A67C5001	A67C5001
R8	ERJ3EKF1582V	ERJ3EKF1582V
R9	NONE	ERJ3GEYJ102V
R17	NONE	NONE
R43	NONE	NONE
R44	NONE	NONE
RX	NONE	NONE
RY-HOT	K6B1AGA00073	K6B1AGA00073
SSR2	A56G3MC202PL	A56G3MC202PL
SSR3	A56G3MC202PL	A56G3MC202PL
ZNR1	NONE	NONE
ZMR3	NONE	NONE
ZMR4	NONE	NONE
IC4	A53D0992	A53D0993

18.2 How to use electronic circuit diagram.

Before using the circuit diagram, read the following carefully.

- Voltage measurement
  Voltage has been measured with a digital tester when the indoor fan is set at high Fan Speed under the following conditions without setting the timer.
  Use them for servicing.
  Voltage indication is in red.
- Measurement point
- Indication for capacitor
  Type:
  Electrolytic Capacitor: Not indicated...NHG series aluminium electrolytic capacitor
  FC.....FC series aluminium electrolytic capacitor
  T.....Ta series aluminium electrolytic capacitor
  Ceramic capacitor: Not indicated.....KB series aluminium electrolytic capacitor
  NB.....NB series ceramic capacitor
  JC..... JC
- Indication for resistance
  K.....KΩ
  M.....MΩ
  W.....Watt
  Not indication.....1/10 W
- ▭ .....Refer to the Form

18.3 Remote Controller

Key No	Key Name
1	OFF/ON
2	TEMP DOWN
3	TEMP UP
4	MODE
5	/
6	OXYGEN
7	FAN SPEED
8	TIMER OFF
9	TIMER ON
10	SWING
11	CANCEL
12	SET
13	/
14	/
15	/
16	/
17	/
18	/

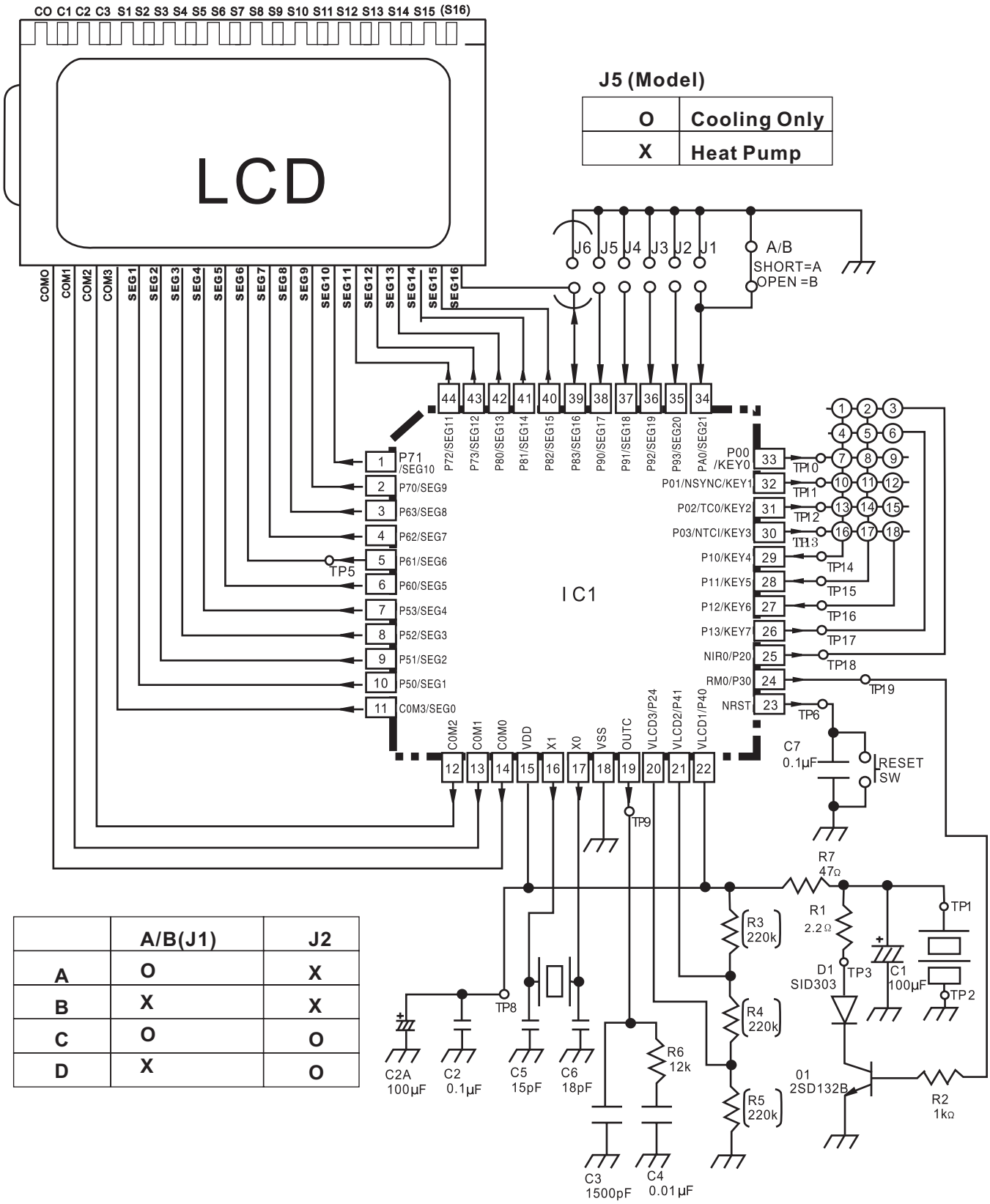

J5 (Model)

O	Cooling Only
X	Heat Pump

	A/B(J1)	J2
A	O	X
B	X	X
C	O	O
D	X	O