Haier

# HW-12C03 HW-12HA03

## Cabinet type air conditioner

# Service Manual

## Contents.


1 PRODUCT CODE ILLUMINATION AND SERIES INTRODUCTION..... 3

2. PRRODUCT TECHNICAL PARAMETER.....4

3.PRODUCT SPECIFICATION.....16

4.MAIN COMPONENTS AND ACCESSORIES NAME,.DIMENTION AND FUNTION .....18

5.KNOCK-DOWN DRAWING AND LIST OF COMPONENT.....26

6.MICROCOMPUTER CONTROLING.....60

7.THE FUNCTION OF ELECTRIC CONTROL INTRODUCTION .....71

8..WIRING DIAGRAM .....78

9.MAINTENANCE ANDTROUBLE SHOOTING..... 82

10. SYSTEM FLOW CHART.....90

11INSTALLATION AND REPAIRING.....98


## Features

- High efficiency for saving energy
- Quickly adjusting the temperature
- Lower noise

**Haier Group**

0010543492

# HAIER

## Window air conditioner

# Technical manual

**Machine Model No.:**

HW-07CA03, HW-07HA03, HW-07CA12, HW-09C03
HW-09CA12, HW-09CC03, HW-09CD03, HW-09CE03,
HW-09HA03, AW072AAAAA, AW094AAMBA
HW-12C03, HW-12C13, HW-12C12, HW-12EA03,
HW-12EA04, HW-12HA03, HW-12HA04, AW124AAMBA
AW122AAACA, AW122AAMCA, HW-18CA13, EA-1990W
HW-18CC03, HW-18CE03, HW-18HA03, HW-18CB03,
AW182AKMBA, HW-24CA03, HW-24C03, HW-24CA13,
AW244AAMAA, AW244AAMAB, AW182AAAAB

# CATALOGUE

1、PRODUCT CODE ILLUMINATION AND SERIES INTRODUCTION.....1
2、PRRODUCT TECHNICAL PARAMETER.....2
3、PRODUCT SPECIFICATION.....3
4、MAIN COMPONENTS AND ACCESSORIES' NAME,
DIMENTION AND FUNTION .....4
5、KNOCK-DOWN DRAWING AND LIST OF COMPONENT.....5
6、MICROCOMPUTER CONTROLING.....6
7、THE FUNCTION OF ELECTRIC CONTROL INTRODUCTION .....7
8、WIRING DIAGRAM .....8
9、MAINTENANCE ANDTROUBLE SHOOTING.....9
10、SYSTEM FLOW CHART.....10
11、INSTALLATION AND REPAIRING.....11

# 1、PRODUCT CODE ILLUMINATION AND SERIES INTRODUCTION

a、model code rule description

## 1.1 Model identification:

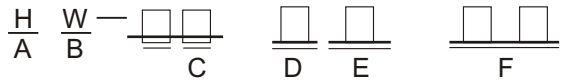


A: Abbreviation of Haier
B: Abbreviation of Window
C: Nominal cooling capacity(BTU/h) with the first two numbers based on one thousand unit

D: Function code
C-Cooling only
H-Heating pump
E-Electric aided heating
E: Developing sequence
F: The type of power supply

A: Abbreviation of air conditioner
B: Abbreviation of window
C: Nominal cooling capacity(BTU/h)with the first two numbers based on one thousand unit
D: The type of power supply
E: structural feature
F: Appearance feature
G: The kind of referigerant
H: Frequency
I: Type of climate

**Examples:**

HW-07CA03

-It represents window air conditioner. Cooling capacity is 7000 BTU/h and the power supply is 220~230V/50Hz.

**AW122AAACA**

--It represents window air conditioner . Cooling capacity is 12000 BTU/h and the power supply is 220~240V/50Hz. It is whole unit. The case used is the common case with large arc inlet bar. The proper climate type is T1.

## 2、PRRODUCT TECHNICAL PARAMETER

※ The manufacture reserves the right to change any product specifications without notice.

| Item | | | UNIT | HW-07CA03<br>AW072AAMAA | HW-07HA03<br>AW072AAAAA |
|---|---|---|---|---|---|
| Cooling capacity | | | BTU/h | 7000 | 7000 |
| Heating capacity | | | BTU/h | / | 7000 |
| Power supply | | | | 1PH,220V~,50Hz | 1PH,220V~, 50Hz |
| Cooling | Power input | | W | 777 | 820 |
| | Running current | | A | 3.8 | 4.5 |
| | EER | | BTU/ (hW) | 9.01 | 8.54 |
| Heating | Power input | | W | / | 720 |
| | Running current | | A | / | 4.0 |
| | COP | | BTU/(hW) | / | 9.72 |
| Sound Level | Indoor side | | dB(A) | 50 | 50 |
| | Outdoor side | | dB(A) | / | / |
| Case | Height | | ■ | 340 | 340 |
| | Width | | ■ | 520 | 520 |
| | Depth | | ■ | 570 | 570 |
| Packaging dimensions | Height | | ■ | 455 | 455 |
| | Width | | ■ | 610 | 610 |
| | Depth | | ■ | 620 | 620 |
| Weight | Net | | kg | 34 | 34 |
| | Gross | | kg | 38 | 38 |
| Compressor | Type | | | Rotary | Rotary |
| | Model | | | QX-13 | QX-14(F) |
| | Running cap. for comp. | | uF | 17.5 | 20 |
| | Starting method | | | PSC | PSC |
| Pressure | Heating side | | MPa | 2.65 | 2.65 |
| | Cooling side | | MPa | 0.65 | 2.65 |
| Refrigerant | Model | | | R22 | R22 |
| | charge | | kg | 0.65 | 0.7 |
| Fan | Type | indoor unit | | Acentric fan | Acentric fan |
| | | outdoor unit | | Axial fan | Axial fan |
| | Fan speed | Hi | r/min | 870±50 | 870±50 |
| | | Lo | r/min | 720±50 | 720±50 |
| | Running capacitor | | uF | 2.5uF/450V | 2.5uF/450V |
| Air direction control | | | | 4-way*and auto swing | 4-way*and auto swing |
| Air volume | | | $m^3$/hr | 300 | 300 |
| Moisture removal | | | $m^3$/hr | $0.9X10^{-3}$ | $0.9X10^{-3}$ |
| Attestation | | | | CE | CE |
| Compressor oil charge | | | ml | | |
| Exchanging pipe type/diameter | | | mm | evaporator: ∅7condenser∅9 | evaporator: ∅7 condenser∅9 |
| Fin factor | | | | / | / |
| Fin material | | | | Hydrophile aluminum foil | Hydrophile aluminum foil |
| Case material | | | | Electrical zinc board | Electrical zinc board |
| Type of capillary | | | | $TP_2Y$∅2.7X0.5 | $TP_2Y$ ∅2.7X0.5 |
| Total area of evaporator | | | $mm^2$ | 2.91 | 2.91 |
| Total area of condenser | | | $mm^2$ | 4.52 | 4.52 |

※ The manufacture reserves the right to change any product specifications without notice.

| Item | | | UNIT | HW-09C03 | HW-09CD03 |
|---|---|---|---|---|---|
| Cooling capacity | | | BTU/h | 9000 | 9000 |
| Heating capacity | | | BTU/h | / | / |
| Power supply | | | | 1PH,220V~,50Hz | 1PH,220V~, 50Hz |
| Cooling | Power input | | W | 950 | 950 |
| | Running current | | A | 4.6 | 4.6 |
| | EER | | BTU/ (hW) | 9.47 | 9.47 |
| Heating | Power input | | W | / | / |
| | Running current | | A | / | / |
| | COP | | BTU/(hW) | / | / |
| Sound Level | Indoor side | | dB(A) | 48 | 48 |
| | Outdoor side | | dB(A) | / | / |
| Case | Height | | ■ | 340 | 340 |
| | Width | | ■ | 520 | 520 |
| | Depth | | ■ | 570 | 570 |
| Packaging dimensions | Height | | ■ | 460 | 460 |
| | Width | | ■ | 610 | 610 |
| | Depth | | ■ | 640 | 640 |
| Weight | Net | | kg | 36 | 36 |
| | Gross | | kg | 40 | 40 |
| Compressor | Type | | | Rotary | Rotary |
| | Model | | | QX-16A | QX-17A020 |
| | Running cap. for comp. | | uF | 20Mf/460VAC | 30Mf/460VAC |
| | Starting method | | | PSC | PSC |
| Pressure | Heating side | | MPa | 2.65 | 2.65 |
| | Cooling side | | MPa | 0.65 | 0.65 |
| Refrigerant | Model | | | R22 | R22 |
| | charge | | kg | 0.73 | 0.73 |
| Fan | Type | indoor unit | | Acentric fan | Acentric fan |
| | | outdoor unit | | Axial fan | Axial fan |
| | Fan speed | Hi | r/min | 880±30 | 880±30 |
| | | Lo | r/min | 800±30 | 800±30 |
| | Running capacitor | | uF | 2.5uF/440V | 2.5uF/450V |
| Air direction control | | | | 4-way*and auto swing | 4-way*and auto swing |
| Air volume | | | $m^3$/hr | 430 | 430 |
| Moisture removal | | | $m^3$/hr | $1.2X10^{-3}$ | $1.2X10^{-3}$ |
| Attestation | | | | CE | CE |
| Compressor oil charge | | | ml | 350 | |
| Exchanging pipe type/diameter | | | mm | evaporator: ∅ 7 condenser∅ 9 | evaporator:∅7 condenser ∅ 9 |
| Fin factor | | | | / | / |
| Fin material | | | | Hydrophile aluminum foil | Hydrophile aluminum foil |
| Case material | | | | Electrical zinc board | Electrical zinc board |
| Type of capillary | | | | $TP_2Y$∅2.7X0.5 | $TP_2Y$ ∅2.7X0.5 |
| Total area of evaporator | | | $mm^2$ | 2.91 | 2.91 |
| Total area of condenser | | | $mm^2$ | 4.52 | 4.52 |

※ The manufacture reserves the right to change any product specifications without notice.

| Item | | | UNIT | HW-09CE03 | HW-09HA03 |
|---|---|---|---|---|---|
| Cooling capacity | | | BTU/h | 9000 | 9000 |
| Heating capacity | | | BTU/h | / | / |
| Power supply | | | | 1PH,220V~,50Hz | 1PH,220V~, 50Hz |
| Cooling | Power input | | W | 950 | 1160 |
| | Running current | | A | 4.6 | 5.8 |
| | EER | | BTU/ (hW) | 9.47 | 7.76 |
| Heating | Power input | | W | / | 1100 |
| | Running current | | A | / | 5.3 |
| | COP | | BTU/(hW) | / | |
| Sound Level | Indoor side | | dB(A) | 48 | 48 |
| | Outdoor side | | dB(A) | / | / |
| Case | Height | | ■ | 340 | 340 |
| | Width | | ■ | 520 | 520 |
| | Depth | | ■ | 570 | 570 |
| Packaging dimensions | Height | | ■ | 455 | 455 |
| | Width | | ■ | 610 | 610 |
| | Depth | | ■ | 640 | 640 |
| Weight | Net | | kg | 36 | 36 |
| | Gross | | kg | 40 | 40 |
| Compressor | Type | | | Rotary | Rotary |
| | Model | | | QX-17D020 | QX-184A020 |
| | Running cap. for comp. | | uF | | |
| | Starting method | | | | |
| Pressure | Heating side | | MPa | 2.65 | 2.65 |
| | Cooling side | | MPa | 0.65 | 2.65 |
| Refrigerant | Model | | | R22 | R22 |
| | charge | | kg | 0.73 | 0.88 |
| Fan | Type | indoor unit | | Acentric fan | Acentric fan |
| | | outdoor unit | | Axial fan | Axial fan |
| | Fan speed | Hi | r/min | 880±30 | 880±30 |
| | | Lo | r/min | 800±30 | 800±30 |
| | Running capacitor | | uF | 2.5uF/450V | 2.5uF/450V |
| Air direction control | | | | 4-way*and auto swing | 4-way*and auto swing |
| Moisture removal | | | $m^3$/hr | $1.2X10^{-3}$ | $1.2X10^{-3}$ |
| Attestation | | | | CE | CE |
| Compressor oil charge | | | ml | | |
| Exchanging pipe type/diameter | | | mm | evaporator:∅7 condenser∅9 | evaporator:∅7 condensor∅9 |
| Fin factor | | | | / | / |
| Fin material | | | | Hydrophile aluminum foil | Hydrophile aluminum foil |
| Case material | | | | Electrical zinc board | Electrical zinc board |
| Type of capillary | | | | $TP_2Y$∅2.7X0.5 | $TP_2Y$ ∅2.7X0.5 |
| Total area of evaporator | | | $mm^2$ | 2.91 | 2.91 |
| Total area of condenser | | | $mm^2$ | 4.52 | 4.52 |

※ The manufacture reserves the right to change any product specifications without notice.

| Item | | | UNIT | HW-12C03 AW122AAMCA | HW-12C13 AW124AAMBA |
|---|---|---|---|---|---|
| Cooling capacity | | | BTU/h | 12000 | 12000 |
| Heating capacity | | | BTU/h | / | / |
| Power supply | | | | 1PH,220V~,50Hz | 1PH,220V~, 50Hz |
| Cooling | Power input | | W | 1400 | 1400 |
| | Running current | | A | 6.6 | 7.2 |
| | EER | | BTU/ (hW) | 8.57 | 8.57 |
| Heating | Power input | | W | / | / |
| | Running current | | A | / | / |
| | COP | | BTU/(hW) | / | / |
| Sound Level | Indoor side | | dB(A) | 50 | 50 |
| | Outdoor side | | dB(A) | 62 | / |
| Case | Height | | ■ | 400 | 400 |
| | Width | | ■ | 560 | 560 |
| | Depth | | ■ | 650 | 650 |
| Packaging dimensions | Height | | ■ | 515 | 515 |
| | Width | | ■ | 635 | 635 |
| | Depth | | ■ | 740 | 740 |
| Weight | Net | | kg | 48 | 48 |
| | Gross | | kg | 53 | 53 |
| Compressor | Type | | | Rotary | Rotary |
| | Model | | | QX-23A020 | 48R342AS-574 |
| | Running cap. for comp. | | uF | 30Mf/450VAC | 20Mf/450VAC |
| | Starting method | | | CSR | |
| Pressure | Heating side | | MPa | 2.65 | 2.65 |
| | Cooling side | | MPa | 0.65 | 0.65 |
| Refrigerant | Model | | | R22 | R22 |
| | charge | | kg | 0.9 | 0.85 |
| Fan | Type | indoor unit | | Acentric fan | Acentric fan |
| | | outdoor unit | | Axial fan | Axial fan |
| | Fan speed | Hi | r/min | 900±45 | 900±45 |
| | | Lo | r/min | 710±45 | 710±45 |
| | Running capacitor | | uF | 2.5/450VAC | 2.5/450VAC |
| Air direction control | | | | 4-way*and auto swing | 4-way*and auto swing |
| Air volume | | | $m^3$/hr | 500 | 500 |
| Moisture removal | | | $m^3$/hr | $1.8X10^{-3}$ | $1.8X10^{-3}$ |
| Attestation | | | | CE | |
| Compressor oil charge | | | ml | | |
| Exchanging pipe type/diameter | | | mm | evaporator: ∅7 condensor∅9 | evaporator: ∅7 condensor ∅ 9 |
| Fin factor | | | | / | / |
| Fin material | | | | Hydrophile aluminum foil | Hydrophile aluminum foil |
| Case material | | | | Electrical zinc board | Electrical zinc board |
| Type of capillary | | | | $TP_2Y$∅2.7X0.5 | $TP_2Y$ ∅2.7X0.5 |
| Total area of evaporator | | | $mm^2$ | 4.01 | 4.01 |
| Total area of condenser | | | $mm^2$ | 5.95 | 5.95 |

※ The manufacture reserves the right to change any product specifications without notice.

| Item | | | UNIT | HW-12HA04 | HW-12eA04 |
|---|---|---|---|---|---|
| Cooling capacity | | | BTU/h | 11300 | 11300 |
| Heating capacity | | | BTU/h | 11300 | 11300 |
| Power supply | | | | 1PH,220V~,50Hz | 1PH,220V~, 50Hz |
| Cooling | Power input | | W | 1380 | 1380 |
| | Running current | | A | 6.6 | 6.6 |
| | EER | | BTU/ (hW) | 8.18 | 8.18 |
| Heating | Power input | | W | 1200 | 1200 |
| | Running current | | A | 5.8 | 5.8 |
| | COP | | BTU/(hW) | 9.42 | 9.42 |
| Sound Level | Indoor side | | dB(A) | 53 | 53 |
| | Outdoor side | | dB(A) | 62 | 62 |
| Case | Height | | ■ | 400 | 400 |
| | Width | | ■ | 560 | 560 |
| | Depth | | ■ | 650 | 650 |
| Packaging dimensions | Height | | ■ | 515 | 515 |
| | Width | | ■ | 635 | 635 |
| | Depth | | ■ | 740 | 740 |
| Weight | Net | | kg | 50 | 50 |
| | Gross | | kg | 54 | 54 |
| Compressor | Type | | | Rotary | Rotary |
| | Model | | | QX-23U | QX-23U |
| | Running cap. for comp. | | uF | 30Mf/450VAC | 20Mf/450VAC |
| | Starting method | | | CSR | CSR |
| Pressure | Heating side | | MPa | 2.65 | 2.65 |
| | Cooling side | | MPa | 2.65 | 2.65 |
| Refrigerant | Model | | | R22 | R22 |
| | charge | | kg | 0.9 | 0.9 |
| Fan | Type | indoor unit | | Acentric fan | Acentric fan |
| | | outdoor unit | | Axial fan | Axial fan |
| | Fan speed | Hi | r/min | 880±30 | 880±30 |
| | | Lo | r/min | 810±30 | 810±30 |
| | Running capacitor | | uF | 2.5/450VAC | 2.5/450VAC |
| Air direction control | | | | 4-way*and auto swing | 4-way*and auto swing |
| Air volume | | | $m^3$/hr | 600 | 600 |
| Moisture removal | | | $m^3$/hr | $1.68X10^{-3}$ | $1.68X10^{-3}$ |
| Attestation | | | | | |
| Compressor oil charge | | | ml | | |
| Exchanging pipe type/diameter | | | mm | evaporator: ∅7 condenser∅9 | evaporator: ∅7 condenser∅9 |
| Fin factor | | | | / | / |
| Fin material | | | | Hydrophile aluminum foil | Hydrophile aluminum foil |
| Case material | | | | Electrical zinc board | Electrical zinc board |
| Type of capillary | | | | $TP_2Y$∅2.7X0.5 | $TP_2Y$ ∅2.7X0.5 |
| Total area of evaporator | | | $mm^2$ | 4.01 | 4.01 |
| Total area of condenser | | | $mm^2$ | 5.95 | 5.95 |

※ The manufacture reserves the right to change any product specifications without notice.

| Item | | | UNIT | AW094AAMBA | AW122AAMBA |
|---|---|---|---|---|---|
| Cooling capacity | | | BTU/h | | 11300 |
| Heating capacity | | | BTU/h | | 11300 |
| Power supply | | | | | 1PH,220V~, 50Hz |
| Cooling | Power input | | W | | 1380 |
| | Running current | | A | | 6.6 |
| | EER | | BTU/ (hW) | | 8.18 |
| Heating | Power input | | W | | 1200 |
| | Running current | | A | | 5.8 |
| | COP | | BTU/(hW) | | 9.42 |
| Sound Level | Indoor side | | dB(A) | | 53 |
| | Outdoor side | | dB(A) | | 62 |
| Case | Height | | ■ | | 400 |
| | Width | | ■ | | 560 |
| | Depth | | ■ | | 650 |
| Packaging dimensions | Height | | ■ | | 515 |
| | Width | | ■ | | 635 |
| | Depth | | ■ | | 740 |
| Weight | Net | | kg | | 50 |
| | Gross | | kg | | 54 |
| Compressor | Type | | | | Rotary |
| | Model | | | | QX-23U |
| | Running cap. for comp. | | uF | | 20Mf/450VAC |
| | Starting method | | | | CSR |
| Pressure | Heating side | | MPa | | 2.65 |
| | Cooling side | | MPa | | 2.65 |
| Refrigerant | Model | | | | R22 |
| | charge | | kg | | 0.9 |
| Fan | Type | indoor unit | | | Acentric fan |
| | | outdoor unit | | | Axial fan |
| | Fan speed | Hi | r/min | | 880±30 |
| | | Lo | r/min | | 810±30 |
| | Running capacitor | | uF | | 2.5/450VAC |
| Air direction control | | | | | 4-way*and auto swing |
| Air volume | | | $m^3$/hr | | 600 |
| Moisture removal | | | $m^3$/hr | | $1.68X10^{-3}$ |
| Attestation | | | | | |
| Compressor oil charge | | | ml | | |
| Exchanging pipe type/diameter | | | mm | | evaporator: ∅7 condenser∅ 9 |
| Fin factor | | | | | / |
| Fin material | | | | | Hydrophile aluminum foil |
| Case material | | | | | Electrical zinc board |
| Type of capillary | | | | | $TP_2M$ ∅ 2.7X0.5 |
| Total area of evaporator | | | $mm^2$ | | 4.01 |
| Total area of condenser | | | $mm^2$ | | 5.95 |

※ The manufacture reserves the right to change any product specifications without notice.

| Item | | | UNIT | HW-18CC03 EA-1990W AW182AKMBA | HW-18CE03 |
|---|---|---|---|---|---|
| Cooling capacity | | | BTU/h | 18000 | 18000 |
| Heating capacity | | | BTU/h | / | / |
| Power supply | | | | 1PH,220V~,50Hz | 1PH,220V~, 50Hz |
| Cooling | Power input | | W | 2100 | 2100 |
| | Running current | | A | 11.0 | 11.0 |
| | EER | | BTU/ (hW) | 8.57 | 8.57 |
| Heating | Power input | | W | / | / |
| | Running current | | A | / | / |
| | COP | | BTU/(hW) | / | / |
| Sound Level | Indoor side | | dB(A) | 59 | 58 |
| | Outdoor side | | dB(A) | | 62 |
| Case | Height | | ■ | 515 | 515 |
| | Width | | ■ | 735 | 735 |
| | Depth | | ■ | 810 | 810 |
| Packaging dimensions | Height | | ■ | | |
| | Width | | ■ | | |
| | Depth | | ■ | | |
| Weight | Net | | kg | 75 | 75 |
| | Gross | | kg | 79 | 79 |
| Compressor | Type | | | Piston | Piston |
| | Model | | | Bristo1H24B24QAB | Bristo1 H24B24QAB |
| | Running cap. for comp. | | uF | | 35uf/450VAC |
| | Starting method | | | PSC | PSC |
| Pressure | Heating side | | MPa | 2.65 | 2.65 |
| | Cooling side | | MPa | 0.65 | 0.65 |
| Refrigerant | Model | | | R22 | R22 |
| | charge | | kg | | |
| Fan | Type | indoor unit | | Acentric fan | Acentric fan |
| | | outdoor unit | | Axial fan | Axial fan |
| | Fan speed | Hi | r/min | 870±50 | 870±50 |
| | | Lo | r/min | 740±50 | 740±50 |
| | Running capacitor | | uF | 5uF/450V | 5uF/450V |
| Air direction control | | | | 4-way*and auto swing | 4-way*and auto swing |
| Air volume | | | $m^3$/hr | 650 | 650 |
| Moisture removal | | | $m^3$/hr | $1.8X10^{-3}$ | $1.8X10^{-3}$ |
| Attestation | | | | | |
| Compressor oil charge | | | ml | | |
| Exchanging pipe type/diameter | | | mm | evaporator: ∅ 7 condenser ∅ 9 | evaporator: ∅ 7 condenser ∅ 9 |
| Fin factor | | | | / | / |
| Fin material | | | | Hydrophile aluminum foil | Hydrophile aluminum foil |
| Case material | | | | Electrical zinc board | Electrical zinc board |
| Type of capillary | | | | | |
| Total area of evaporator | | | $mm^2$ | 4.63 | 4.63 |
| Total area of condenser | | | $mm^2$ | 7.85 | 7.85 |

※ The manufacture reserves the right to change any product specifications without notice.

| Item | | | UNIT | HW-18HA03 | HW-18CA13 |
|---|---|---|---|---|---|
| Cooling capacity | | | BTU/h | 18000 | 18000 |
| Heating capacity | | | BTU/h | 18000 | / |
| Power supply | | | | 1PH,220V~,50Hz | 1PH,220V~, 60Hz |
| Cooling | Power input | | W | 2100 | 2200 |
| | Running current | | A | 11.0 | 11.0 |
| | EER | | BTU/ (hW) | 8.57 | 8.18 |
| Heating | Power input | | W | 1950 | / |
| | Running current | | A | 9.23 | / |
| | COP | | BTU/(hW) | 9.23 | / |
| Sound Level | Indoor side | | dB(A) | 59 | 58 |
| | Outdoor side | | dB(A) | / | 62 |
| Case | Height | | ■ | 515 | 428 |
| | Width | | ■ | 735 | 660 |
| | Depth | | ■ | 810 | 677 |
| Packaging dimensions | Height | | ■ | | 550 |
| | Width | | ■ | | 780 |
| | Depth | | ■ | | 790 |
| Weight | Net | | kg | 75 | 70 |
| | Gross | | kg | 79 | 74 |
| Compressor | Type | | | Rotary | Rotary |
| | Model | | | PH330X2CS-4KU1 | SHZ73LA2GU |
| | Running cap. for comp. | | uF | 40Mf/450VAC | 35Mf/450VAC |
| | Starting method | | | PSC | |
| Pressure | Heating side | | MPa | 2.65 | 2.65 |
| | Cooling side | | MPa | 2.65 | 0.65 |
| Refrigerant | Model | | | R22 | R22 |
| | charge | | kg | 0.99 | 0.98 |
| Fan | Type | indoor unit | | Acentric fan | Acentric fan |
| | | outdoor unit | | Axial fan | Axial fan |
| | Fan speed | Hi | r/min | 990±50 | 900±45 |
| | | Lo | r/min | 830±50 | 710±45 |
| | Running capacitor | | uF | 5uF/450V | 2.5uF/450V |
| Air direction control | | | | 4-way*and auto swing | |
| Air volume | | | $m^3$/hr | 650 | 720 |
| Moisture removal | | | $m^3$/hr | $2.1X10^{-3}$ | $2.1X10^{-3}$ |
| Attestation | | | | CE | UL |
| Compressor oil charge | | | ml | | |
| Exchanging pipe type/diameter | | | mm | evaporator: ∅ 7 condenser∅ 9 | evaporator: ∅7 condenser∅9 |
| Fin factor | | | | / | / |
| Fin material | | | | Hydrophile aluminum foil | Hydrophile aluminum foil |
| Case material | | | | Electrical zinc board | Electrical zinc board |
| Type of capillary | | | | | |
| Total area of evaporator | | | $mm^2$ | | |
| Total area of condenser | | | $mm^2$ | | |

※ The manufacture reserves the right to change any product specifications without notice.

| Item | | | UNIT | AW222AAAAA | AW222AAMAA |
|---|---|---|---|---|---|
| Cooling capacity | | | BTU/h | 22000 | 22000 |
| Heating capacity | | | BTU/h | 22000 | 22000 |
| Power supply | | | | 1PH,220V~,50Hz | 1PH,220V~, 50Hz |
| Cooling | Power input | | W | 2900 | |
| | Running current | | A | 14.7 | |
| | EER | | BTU/ (hW) | 7.586 | |
| Heating | Power input | | W | 2750 | |
| | Running current | | A | 13.9 | |
| | COP | | BTU/(hW) | 8.0 | |
| Sound Level | Indoor side | | dB(A) | 58 | |
| | Outdoor side | | dB(A) | 66 | |
| Case | Height | | ■ | 515 | |
| | Width | | ■ | 735 | |
| | Depth | | ■ | 810 | |
| Packaging dimensions | Height | | ■ | 560 | |
| | Width | | ■ | 761 | |
| | Depth | | ■ | 945 | |
| Weight | Net | | kg | 78 | |
| | Gross | | kg | 83 | |
| Compressor | Type | | | Piston | |
| | Model | | | Bristo 1H23B32QABKA | |
| | Running cap. for comp. | | uF | 45Mf/440VAC | |
| | Starting method | | | 88-1-8Mf/250 VAC | |
| Pressure | Heating side | | MPa | 2.65 | |
| | Cooling side | | MPa | 2.65 | |
| Refrigerant | Model | | | R22 | |
| | charge | | kg | 1.8 | |
| Fan | Type | indoor unit | | Acentric fan | |
| | | outdoor unit | | Axial fan | |
| | Fan speed | Hi | r/min | 880±30 | |
| | | Lo | r/min | 810±30 | |
| | Running capacitor | | uF | 2.5/450VAC | |
| Air direction control | | | | 4-way*and auto swing | |
| Air volume | | | $m^3$/hr | 600 | 600 |
| Moisture removal | | | $m^3$/hr | $1.68X10^{-3}$ | $1.68X10^{-3}$ |
| Attestation | | | | CE | CE |
| Compressor oil charge | | | ml | | |
| Exchanging pipe type/diameter | | | mm | evaporator: ∅7condenser∅9 | evaporator:∅7 condenser ∅ 9 |
| Fin factor | | | | / | / |
| Fin material | | | | Hydrophile aluminum foil | Hydrophile aluminum foil |
| Case material | | | | Electrical zinc board | Electrical zinc board |
| Type of capillary | | | | $TP_2M$∅ 2.7X0.5 | $TP_2M$ ∅ 2.7X0.5 |
| Total area of evaporator | | | $mm^2$ | 4.01 | 4.01 |
| Total area of condenser | | | $mm^2$ | 5.95 | 5.95 |

## 2. product specifications

※ The manufacture reserves the right to change any product specifications without notice.

| Item \ Model | | | | HW-24C03 | HW-24CA03 | HW-24CA13 | AW222AAAAA |
|---|---|---|---|---|---|---|---|
| Cooling capacity | | | BTU/h | 24000 | 24000 | 24000 | 22000 |
| Heating capacity | | | BTU/h | ..... | ..... | ..... | 22000 |
| Power supply | | | W | 1PH ,220V~,50Hz | 1PH ,220V~,50Hz | 1PH ,220V~,50Hz | 1PH,220V~,50Hz |
| cooling | Power input | | W | 3100 | 3100 | | 2900 |
| | Running current | | A | 15.8 | 15.8 | | 14.7 |
| | EER | BTU/(h•w) | | 8.5 | 7.8 | | 7.58 |
| heating | Power input | | W | ..... | ..... | | 2750 |
| | Running current | | A | ..... | ..... | | 13.9 |
| | COP | BTU/(h • w) | | ..... | ..... | | 8 |
| Sound level | Indoor unit | | dB(A) | 61/57/55 | 61/57/55 | 61/57/55 | 58 |
| | Outdoor unit | | dB(A) | 66 | 66 | 66 | 66 |
| Packaging dimensions | Indoor unit | | mm | 945x761x560 | 945x761x560 | 945x761x560 | 945x761x560 |
| | Outdoor unit | | mm | ..... | ..... | ..... | ..... |
| weight | Indoor unit | | kg | 78(net)83(gross) | 78(net)83(gross) | 78(net)83(gross) | 78(net)83(gross) |
| | Outdoor unit | | kg | ..... | ..... | ..... | ..... |
| Compressor model | | | | H23B32QABKA | H23B32QABKA | | H23B32QABKA |
| Overload protector | | | | Built-in | Built-in | | Built-in |
| Running capacitor for comp. | | | | 45uf/440VAC | 45uf/440VAC | | 45uf/440VAC |
| Starting method | | | | PSC | PSC | | PSC |
| Refrigerant | | | | R22 | R22 | R22 | R22 |
| Refrigerant charge | | | g | 1800 | 1800 | | 1800 |
| Type of fan unit | Indoor unit | | | Acentric fan | Acentric fan | Acentric fan | Acentric fan |
| | Outdoor unit | | | Axial fan | Axial fan | Axial fan | Axial fan |
| Fan speed | Indoor unit | | r/min | 850/780/710 | 850/780/710 | 850/780/710 | 870 |
| | Outdoor unit | | r/min | 850/780/710 | 850/780/710 | 850/780/710 | ..... |
| Air volume | | | $m^3/h$ | 950 | 950 | 950 | 720 |
| Moisture removal | | | $m^3/h$ | $2.4x10^{-3}$ | $2.4x10^{-3}$ | $2.4x10^{-3}$ | $2.4x10^{-3}$ |
| Piping dimension | Liquid pipe | | mm | ..... | ..... | ..... | ..... |
| | Gas pipe | | mm | ..... | ..... | ..... | ..... |
| Piping connection | | | | ..... | ..... | ..... | ..... |

The manufacture reserves the right to change any product specifications without notice.

| Item \ Model | | | | AW242AAAAB | AW248AAAAA | AW248AQAAA |
|---|---|---|---|---|---|---|
| Cooling capacity | | | BTU/h | 24000 | 24000 | 24000 |
| Heating capacity | | | BTU/h | 24000 | 24000 | 24000 |
| Power supply | | | W | 1PH ,220V~,50Hz | 1PH ,240V~,50Hz | 1PH ,240V~,50Hz |
| cooling | Power input | | W | | 2950 | 2950 |
| | Running current | | A | | 14.7 | 14.7 |
| | EER | BTU/(h•w) | | | 8.13 | 8.13 |
| heating | Power input | | W | | 2600 | 2600 |
| | Running current | | A | | 13.9 | 13.9 |
| | COP | BTU/(h • w) | | | 9.23 | 9.23 |
| Sound level | Indoor unit | | dB(A) | 61/57/55 | 58 | 58 |
| | Outdoor unit | | dB(A) | 66 | 66 | 66 |
| Packaging dimensions | Indoor unit | | mm | 945x761x560 | 945x761x560 | 945x761x560 |
| | Outdoor unit | | mm | ..... | ..... | ..... |
| weight | Indoor unit | | kg | 78(net)83(gross) | 78(net)83(gross) | 78(net)83(gross) |
| | Outdoor unit | | kg | ..... | ..... | ..... |
| Compressor model | | | | | H23B32QABKA | H23B32QABKA |
| Overload protector | | | | | Built-in | Built-in |
| Running capacitor for comp. | | | | | 45uf/440VAC | 45uf/440VAC |
| Starting method | | | | | PSC | PSC |
| Refrigerant | | | | | R22 | R22 |
| Refrigerant charge | | | g | 1800 | 1800 | 1800 |
| Type of fan unit | Indoor unit | | | Acentric fan | Acentric fan | Acentric fan |
| | Outdoor unit | | | Axial fan | Axial fan | Axial fan |
| Fan speed | Indoor unit | | r/min | 850/780/710 | 870 | 870 |
| | Outdoor unit | | r/min | 820 | ..... | ..... |
| Air volume | | | $m^3/h$ | 950 | 720 | 720 |
| Moisture removal | | | $m^3/h$ | $2.4x10^{-3}$ | $2.4x10^{-3}$ | $2.4x10^{-3}$ |
| Piping dimension | Liquid pipe | | mm | ..... | ..... | ..... |
| | Gas pipe | | mm | ..... | ..... | ..... |
| Piping connection | ..... | | ..... ..... | ..... | ..... | ..... |

The manufacture reserves the right to change any product specifications without notice.

| Item \ Model | | | AW222AA MAA | AW244AA MBA | AW244AAM AB | AW248AAABA |
|---|---|---|---|---|---|---|
| Cooling capacity | | BTU/h | 22000 | 24000 | 24000 | 24000 |
| Heating capacity | | BTU/h | ..... | ..... | ..... | 24000 |
| Power supply | | W | 1PH ,220V~,50Hz | 1PH ,220V~,50Hz | 1PH ,220V~,50Hz | 1PH,220V~,50Hz |
| cooling | Power input | W | | | | |
| | Running current | A | | | | |
| | EER | BTU/(h•w) | | | | |
| heating | Power input | W | ..... | ..... | ..... | |
| | Running current | A | ..... | ..... | ..... | |
| | COP | BTU/(h • w) | ..... | ..... | ..... | |
| Sound level | Indoor unit | dB(A) | 61/57/55 | 61/57/55 | 61/57/55 | 61/57/55 |
| | Outdoor unit | dB(A) | 66 | 66 | 66 | 66 |
| Packaging dimensions | Indoor unit | mm | 945x761x560 | 945x761x560 | 945x761x560 | 945x761x560 |
| | Outdoor unit | mm | ..... | ..... | ..... | ..... |
| weight | Indoor unit | kg | 78(net)83(gross) | 78(net)83(gross) | 78(net)83(gross) | 78(net)83(gross) |
| | Outdoor unit | kg | ..... | ..... | ..... | ..... |
| Compressor model | | | | | | |
| Overload protector | | | | | | |
| Running capacitor for comp. | | | | | | |
| Starting method | | | | | | |
| Refrigerant | | | | | | |
| Refrigerant charge | | g | | | | |
| Type of fan unit | Indoor unit | | Acentric fan | Acentric fan | Acentric fan | Acentric fan |
| | Outdoor unit | | Axial fan | Axial fan | Axial fan | Axial fan |
| Fan Speed | Indoor unit | r/min | 850/780/710 | 850/780/710 | 850/780/710 | 850/780/710 |
| | Outdoor unit | r/min | 820 | 820 | 820 | 820 |
| Air volume | | $m^3/h$ | 950 | 950 | 950 | 950 |
| Moisture removal | | $m^3/h$ | $2.4x10^{-3}$ | $2.4x10^{-3}$ | $2.4x10^{-3}$ | $2.4x10^{-3}$ |
| Piping dimension | Liquid pipe | mm | ..... | ..... | ..... | ..... |
| | Gas pipe | mm | ..... | ..... | ..... | ..... |
| Piping connection | | | ..... | ..... | ..... | ..... |

## 3、PRODUCT SPECIFICATION

| | HW-07CA03<br>HW-07HA03<br>AW072AAAAA | HW-07CA12 | HW-09CC03<br>HW-09C03<br>HW-09CA12<br>KC-25(JF) |
|---|---|---|---|
| Structural feature | Whole style air conditioner | Whole style air conditioner | Whole style air conditioner |
| Cooling capacity | 7000BTU/h | 7000BTU/h | 9000BTU/h |
| voltage | 220V | 220V | 220V |
| Type of product | Window air conditioner series | Window air conditioner series | Window air conditioner series |
| Appearance feature | Large arc | Flat board | Flat board |
| Attestation | | | |
| remote | | | |
| refrigerant | R22 | R22 | R22 |
| Climate type | T1 | T1 | T1 |
| dimensions | 340x520x550mm | 340x520x550mm | 340x520x570mm |
| package dimensions | 455x610x620mm | 455x610x620mm | 460x610x640mm |
| Box up document | No | No | No |

| | HW-09CD03<br>HW-09CE03<br>HW-09HA03<br>AW094AAAMBA | HW-12C03 HW-12EA03<br>HW-12C13 HW-12HA03<br>HW-12C12 HW-12EA04<br>HW-12HA04 AW122AAMCA<br>AW124AAMBA AW122AAACA | HW-18CA13<br>HW-18CB03 |
|---|---|---|---|
| Structural feature | Whole style air conditioner | Whole style air conditioner | Whole style air conditioner |
| Cooling capacity | 9000BTU/h | 12000BTU/h | 18000BTU/h |
| voltage | 220V | 220V | 220V |
| Type of product | Window air conditioner series | Window air conditioner series | Window air conditioner series |
| Appearance feature | Large arc | Large arc | Large arc |
| Attestation | | | |
| remote | | | |
| refrigerant | R22 | R22 | R22 |
| Climate type | T1 | T1 | T1 |
| dimensions | 340x520x550mm | 400x560x650mm | 428x660x677mm |
| package dimensions | 455x610x620mm | 515x630x740mm | 550x780x790mm |
| Box up document | No | No | No |

| | HW-18CE03<br>HW-18CC03<br>HW-18HA03<br>EA-1990W<br>AW182AKMBA | HW-24C03 HW-24CA03<br>HW-24CA13 | AW222AAAAA<br>AW222AAMAA |
|---|---|---|---|
| Structural feature | Whole style air conditioner | Whole style air conditioner | Whole style air conditioner |
| Cooling capacity | 18000BTU/h | 24000BTU/h | 22000BTU/h |
| voltage | 220V | 220V | 220V |
| Type of product | Window air conditioner series | Window air conditioner series | Window air conditioner series |
| Appearance feature | Large arc | Large arc | Large arc |
| Attestation | | | |
| remote | | | |
| refrigerant | R22 | R22 | R22 |
| Climate type | T1 | T3 | T1 |
| dimensions | 430x660x738mm | 460x710x870mm | 460x710x870mm |
| package dimensions | 515x735x810mm | 560x761x945mm | 560x761x945mm |
| Box up document | No | No | No |

| | AW182AAAAB | AW244AAMBA AW244AAMAB | AW052AAAAB |
|---|---|---|---|
| Structural feature | Whole style air conditioner | Whole style air conditioner | Whole style air conditioner |
| Cooling capacity | 18000BTU/h | 24000BTU/h | 5000BTU/h |
| voltage | 220V | 220V | 220V |
| Type of product | Window air conditioner series | Window air conditioner series | Window air conditioner series |
| Appearance feature | Large arc | Large arc | HAC |
| Attestation | | | |
| remote | | | |
| refrigerant | R22 | R22 | R22 |
| Climate type | T3 | T3 | T1 |
| dimensions | 430x660x738mm | 460x710x870mm | 460x710x870mm |
| package dimensions | 515x735x810mm | 560x761x945mm | 560x761x945mm |
| Box up document | No | No | No |

## 4、MAIN COMPONENTS AND ACCESSORIES' NAME, DEMENTION AND FUNTION

# Parts Name

EA-1990W
HW-18CC03
HW-24C03
AW242AQAAB

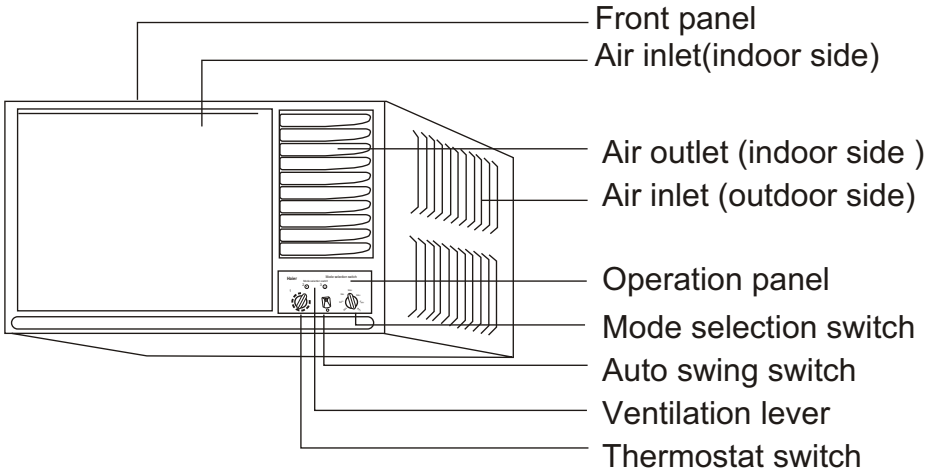


HW-18CE03
HW-24CA03
HW-18CA04
HW-24C13
AW222AAMAA

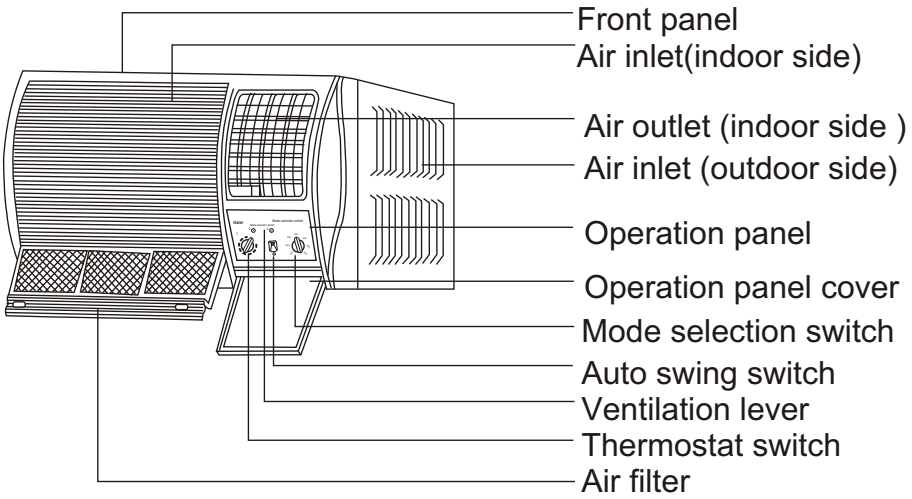


HW-18HA03
HW-24H03
AW222AAAAA

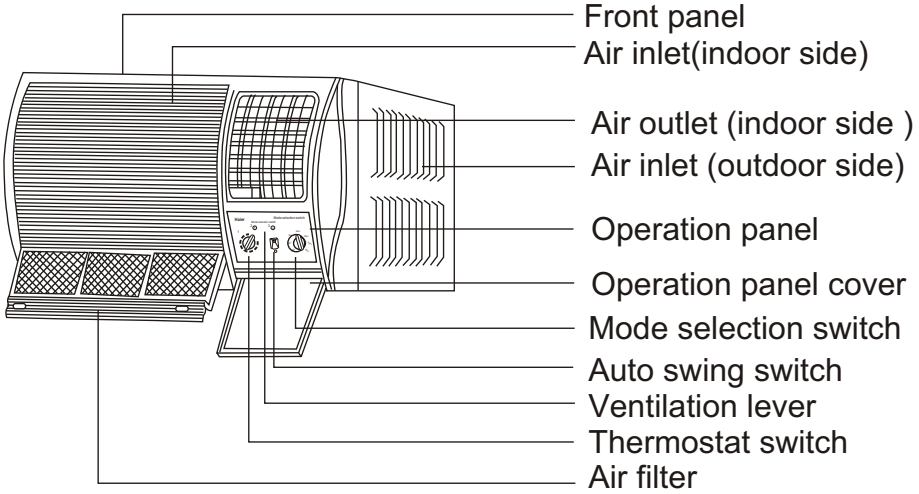

# Parts Name

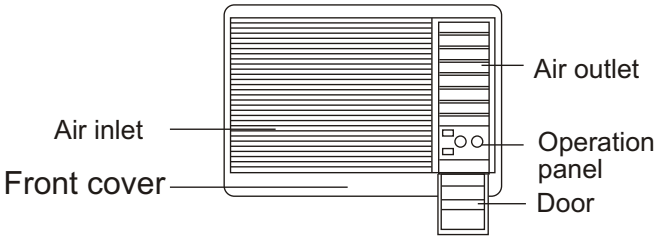


HW-09C03 HW-08C12
HW-09C04 HW-09C12
HW-07CA12 HW-08C13

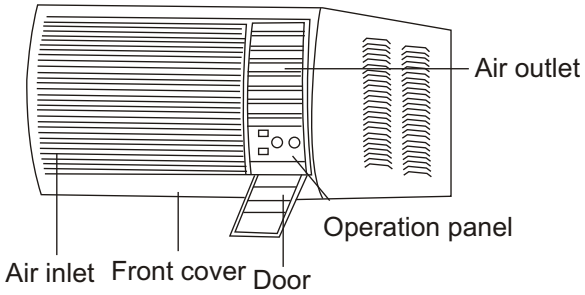


HW-07CA03 HW-07HA03
HW-09CE03 HW-09HA03

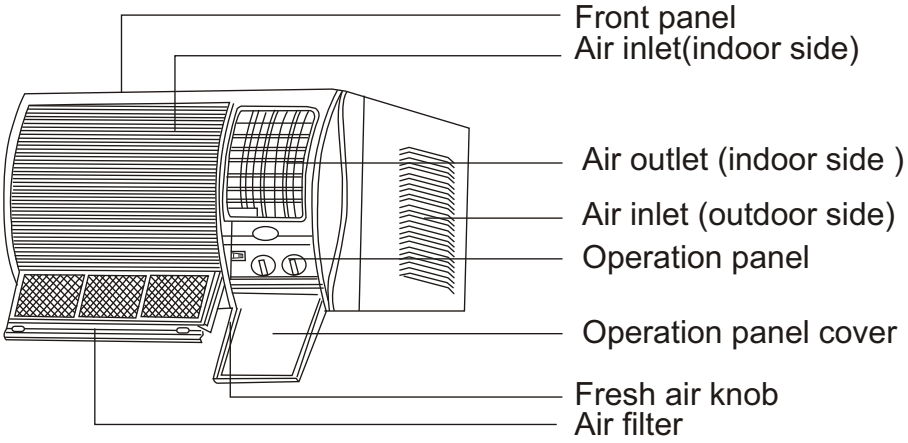


HW-12C03 HW-12C04 HW-12C12
HW-12H03 HW-10C12 HW-12C13

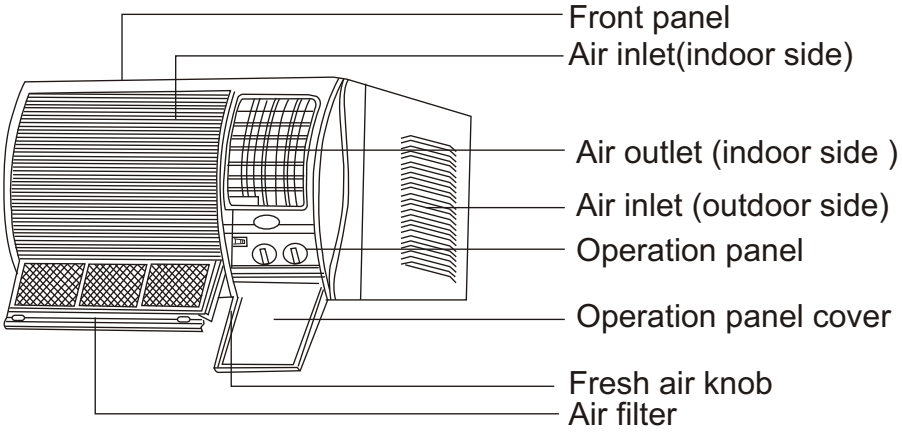


HW-18C03(T3) HW-18CB03 HW-18C13(T3) HW-18CA13

# Parts Name

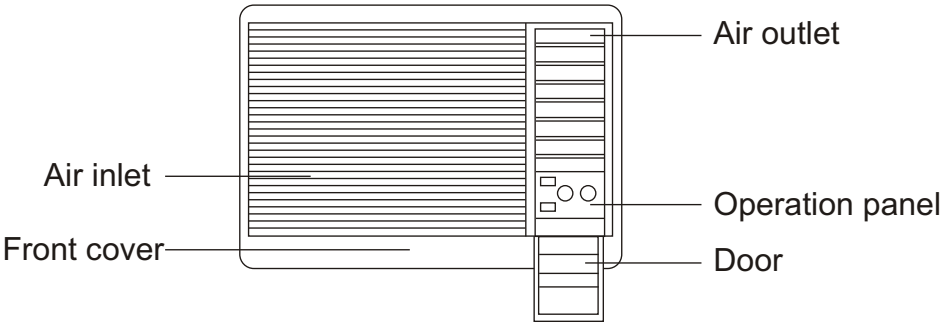


HW-07CA12 HW-08C12 HW-09C03
HW-08C13 HW-09C12 HW-09C04

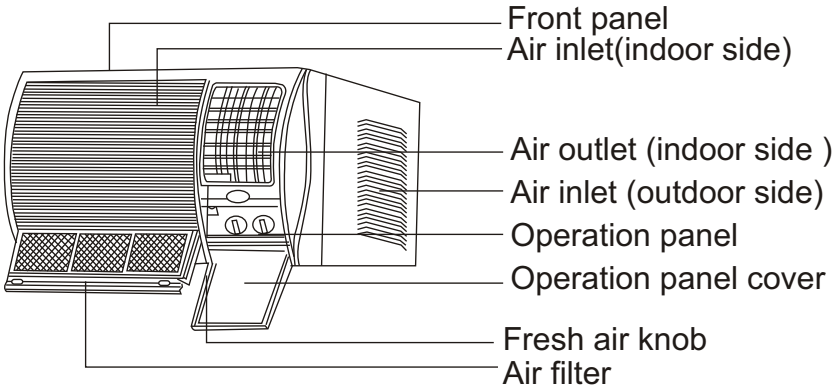


HW-12C03 HW-12C12 HW-12C04 HW-12C13 HW-10C12

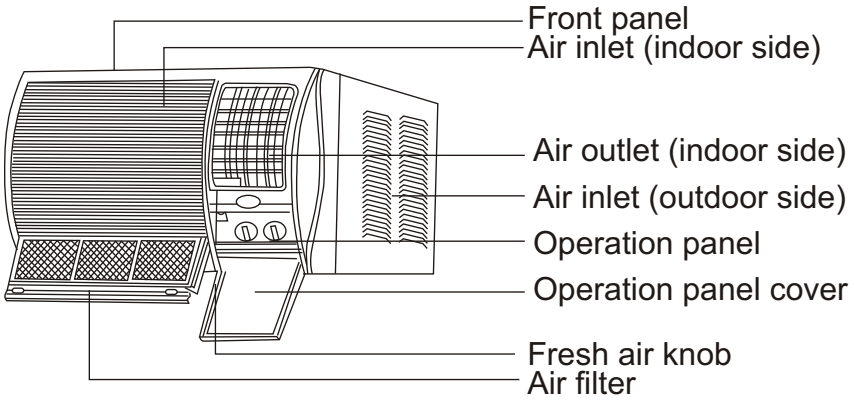


HW-18CB03 HW-18C03(T3) HW-18CA13 HW-18C13(T3)

## 2. Parts demension

Net dimention:

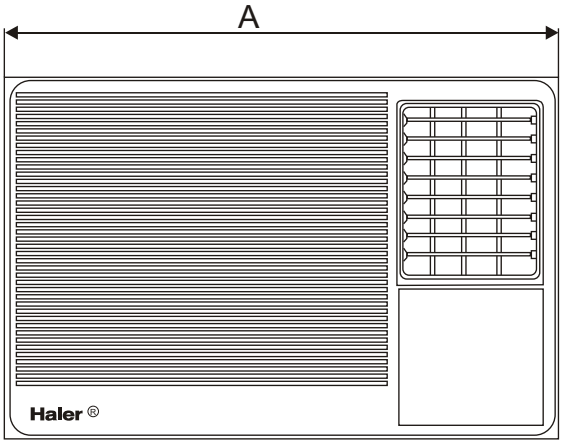


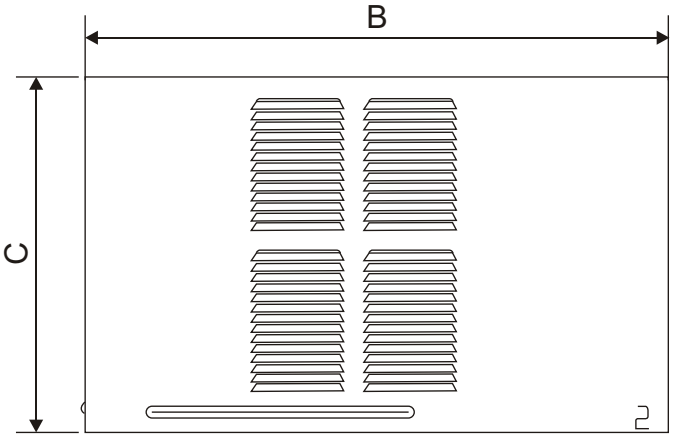


| MOEDL | A | B | C |
|---|---|---|---|
| HW-07CA03 AW072AAAAA<br>HW-07HA03 AW094AAMBA<br>HW-09CD03<br>HW-09CE03<br>HW-09HA03 | 520 | 570 | 340 |
| HW-12C03 AW122AAMCA<br>HW-12C13 AW122AAACA<br>HW-12HA04 AW124AAMBA<br>HW-12eA04 | 560 | 650 | 400 |
| HW-18C13 AW182AKMBA<br>HW-18CE03<br>HW-18HA03 | 660 | 738 | 430 |
| HW-18CA13<br>AW182AAAAB | 660 | 677 | 428 |
| HW-24CA03 AW242AAAAB<br>HW-24CA13 AW244AAMAB<br>AW222AAAAA AW244AAMBA<br>AW222AAMAA | 710 | 870 | 460 |

Net mentions:

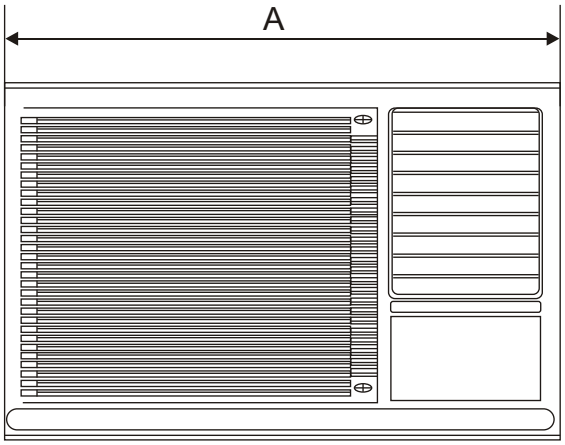


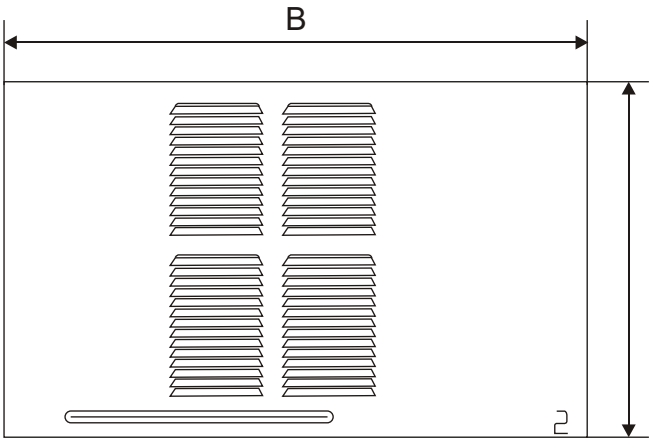


| Model | A(mm) | B(mm) | C(mm) |
|---|---|---|---|
| | | | |
| | | | |
| EA-1990W<br>HW-18CC03 | 660 | 738 | 430 |
| HW-24C03 | 700 | 870 | 460 |

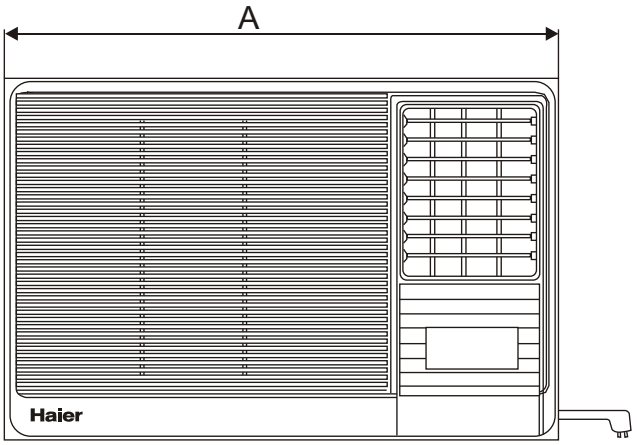


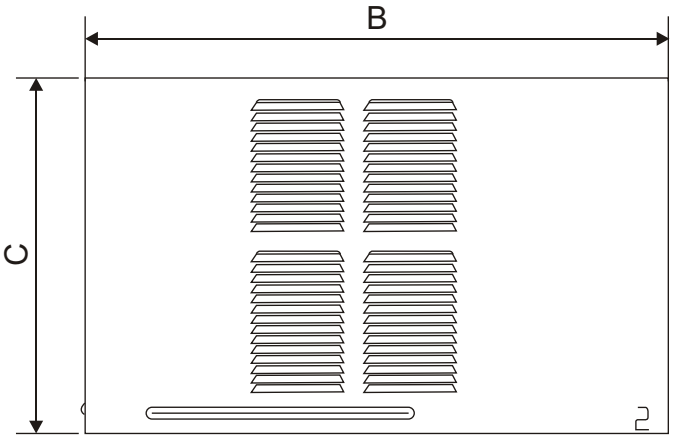


| Model | A(mm) | B(mm) | C(mm) |
|---|---|---|---|
| HW-09C03<br>HW-09CA12<br>HW-09C12 | 520 | 550 | 340 |

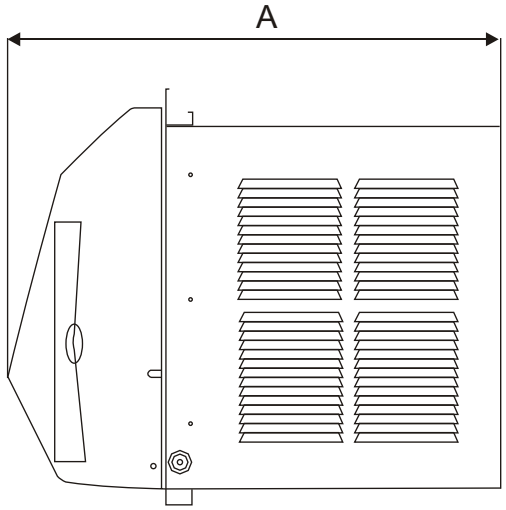


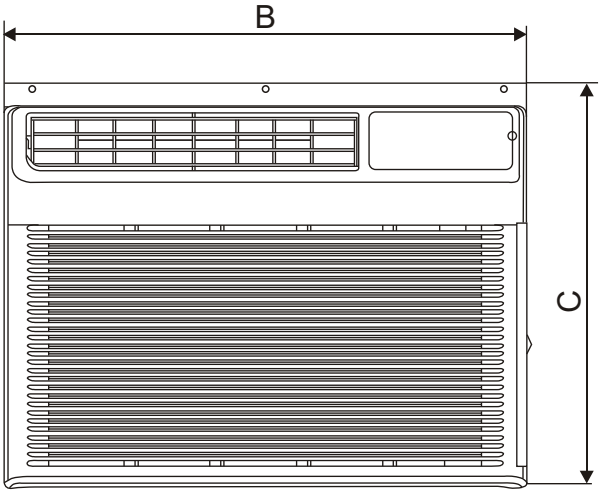


| MODEL | A | B | C |
|---|---|---|---|
| AW052AHMAA | 420 | 500 | 370 |

## 3、FUNCTION

# Description of the parts

For models: HW-09CC03
HW-09CA12

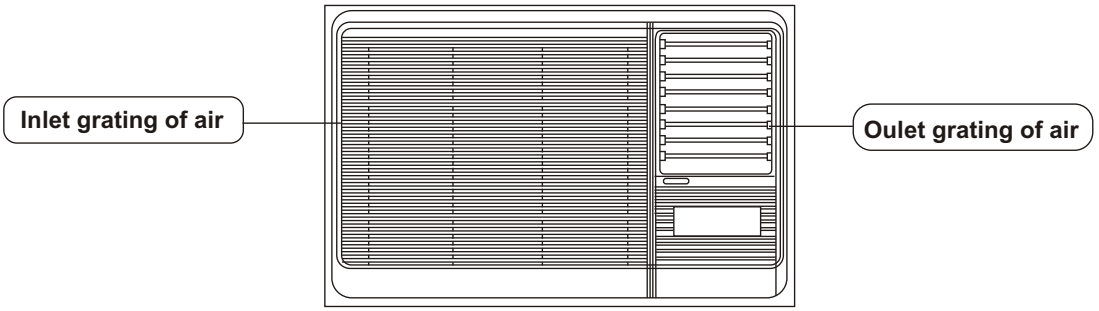


**Time indicator**

Lights up when Timer switch is set on "ON" or "OFF" position.

**Operation mode indicator**

Lights up when compressor starts running.

**Power indicator**

Lights up when "ON/OFF" button on remote controller is pressed.

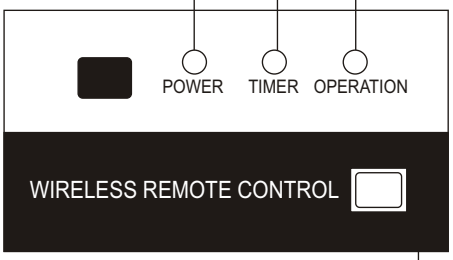


For HW-09CA12

**Emergency switch**

Used when remote controller is lost or does not work. This can make unit run temporarily in Auto temp. mode.

**Note: For HW-09CC03, HW-09CD03 the word"OPERATION"is "RUN".**

**Power indicator**

Lights up when"ON/OFF" button on remote controller is pressed.

**Operation mode indicator**

Lights up when compressor starts running.

**Auxiliary heat indicator**

Lights up when Auxiliary heat function starts.

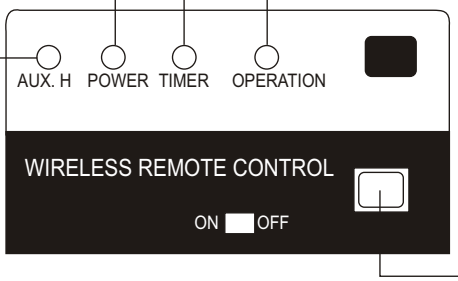


**Time indicator**

Lights up when Timer switch is set on "ON" or "OFF" position.

**Emergency switch**

Used when remote controller is lost or does not work. This can make unit run temporarily in Auto temp. mode.

For model: HW-12eA03
HW-12eA04

## Machine body

For models: HW-09CD03 HW-12eA03 HW-12CA03 HW-18HB03 HW-12HA03 HW-09CA13 HW-12HA04

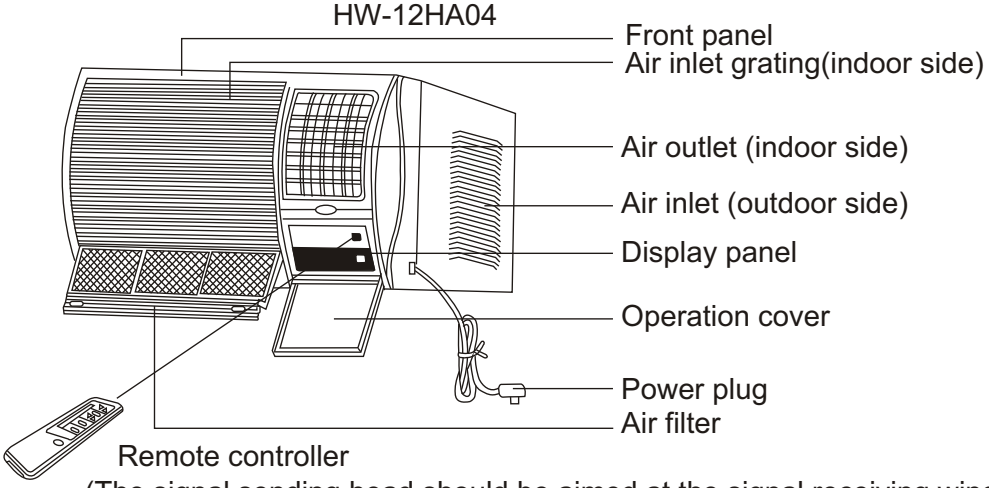


(The signal sending head should be aimed at the signal receiving window and there should not be blocked between them.)

## Display panel

**Time indicator**

Lights up when Timer switch is set on "ON" or "OFF" position.

**Power indicator**

Lights up when "ON/OFF"button on remote controller is pressed.

**Operation mode indicator**

Lights up when compressor starts running.

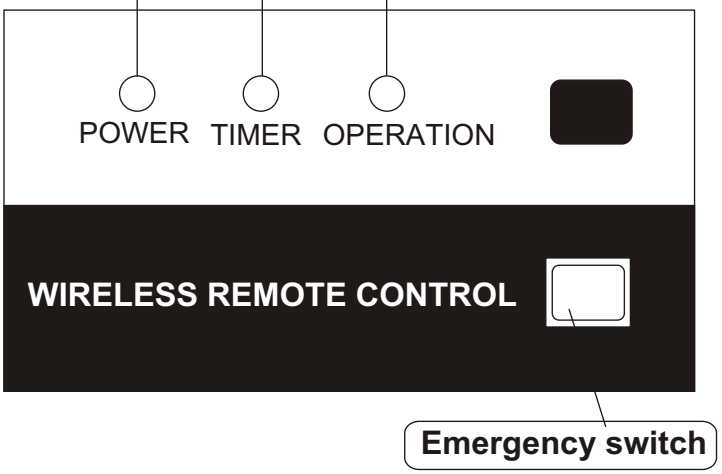


**Emergency switch**

(Used when remote controller is lost or does not work. This can make unit run temporarily in Auto temp mode.)

For models: HW-12CA03 HW-12HA03 HW-12HA04 HW-18HB03 HW-09CA13 AW124AAMBA

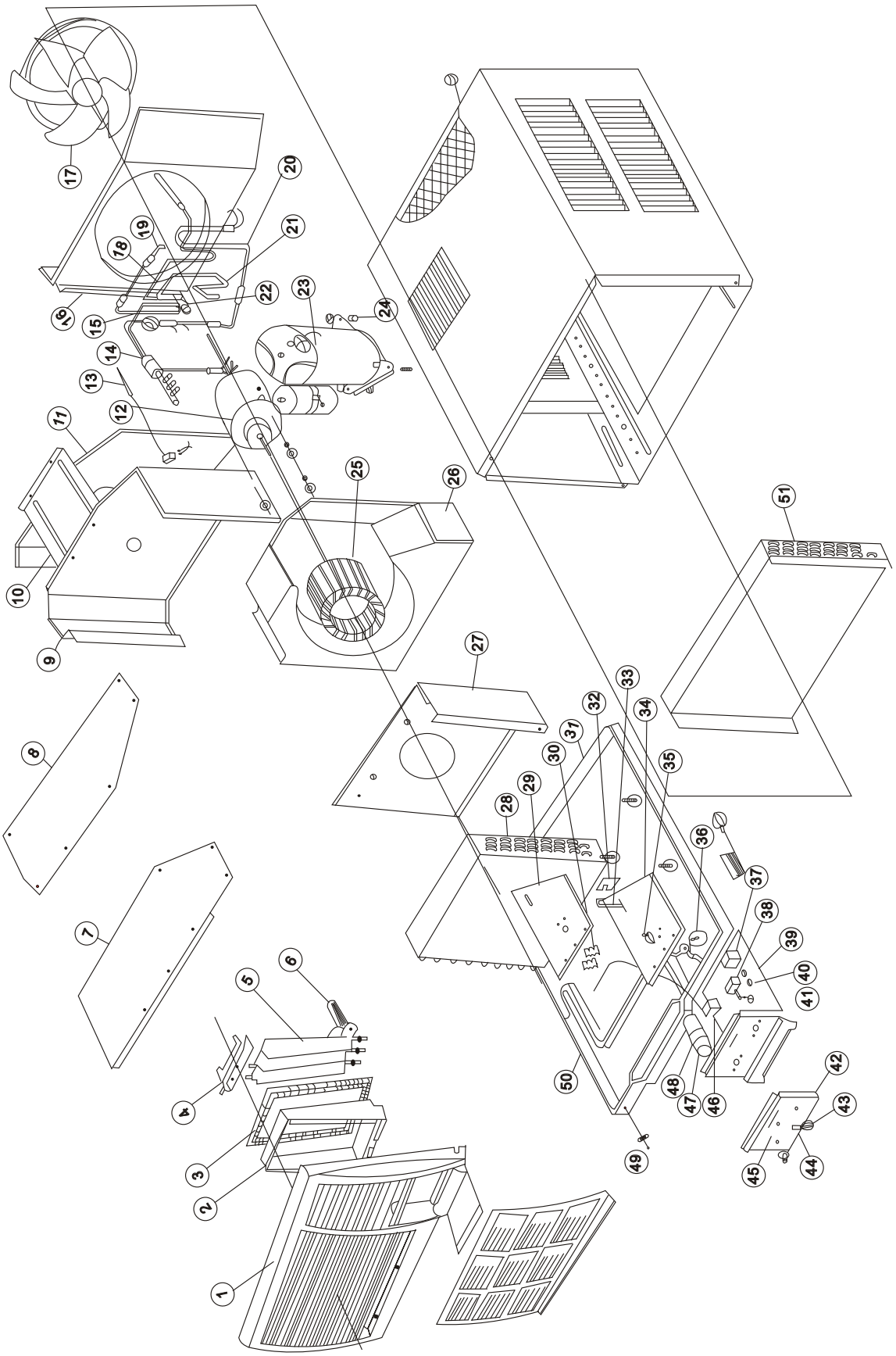
1
2
3
4
5
6
7
8
9
10
11
12
13
14
15
16
17
18
19
20
21
22
23
24
25
26
27
28
29
30
31
32
33
34
35
36
37
38
39
40
41
42
43
44
45
46
47
48
49
50
51

# HW-12CA12

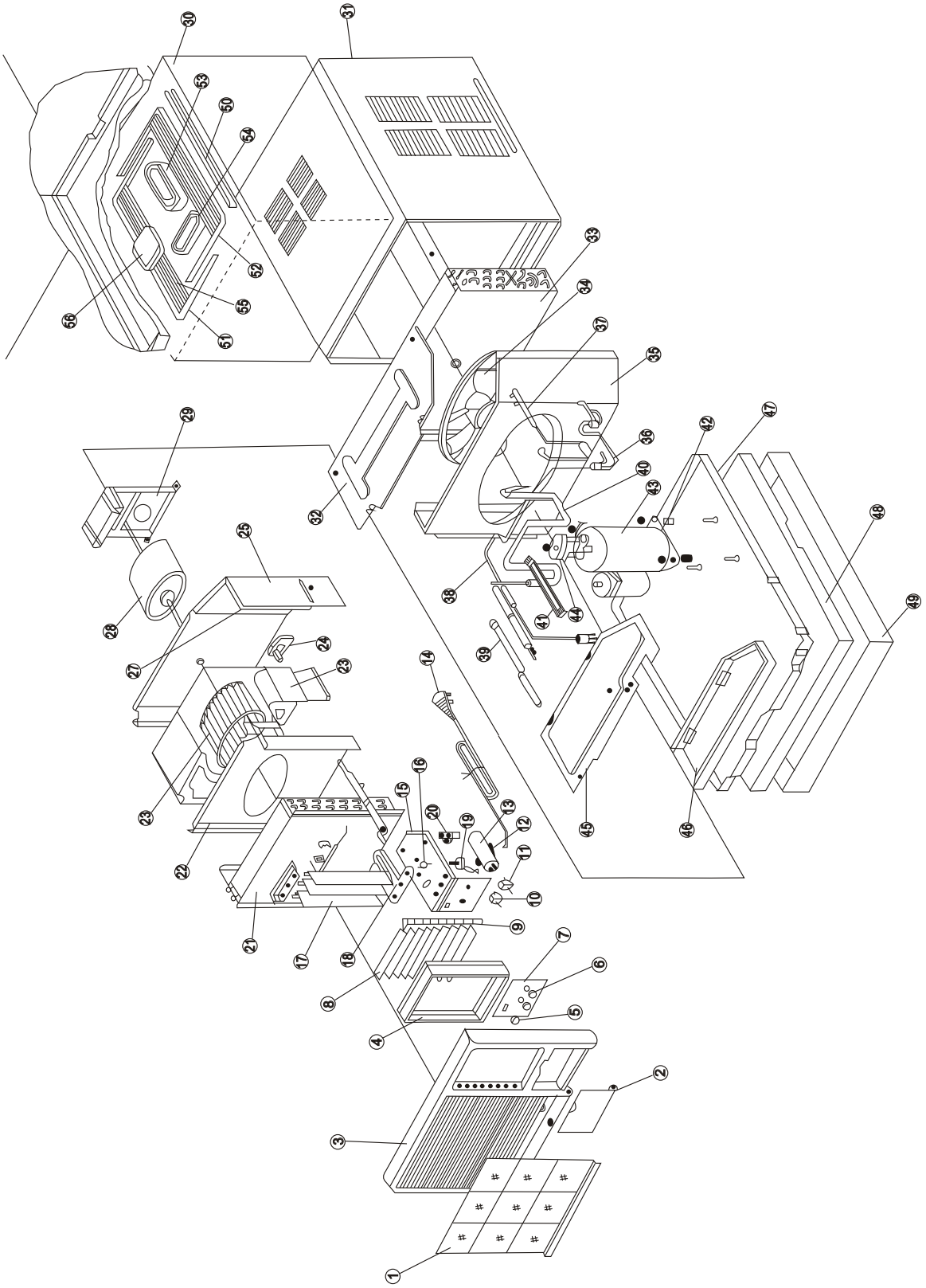
30
31
53
50
54
52
56
59
51
33
34
37
35
29
32
42
47
36
40
43
48
25
38
44
41
49
28
27
24
39
23
14
16
15
20
19
13
12
23
22
11
10
45
46
9
21
17
18
7
6
8
5
4
2
3
1

## HW-09CB12

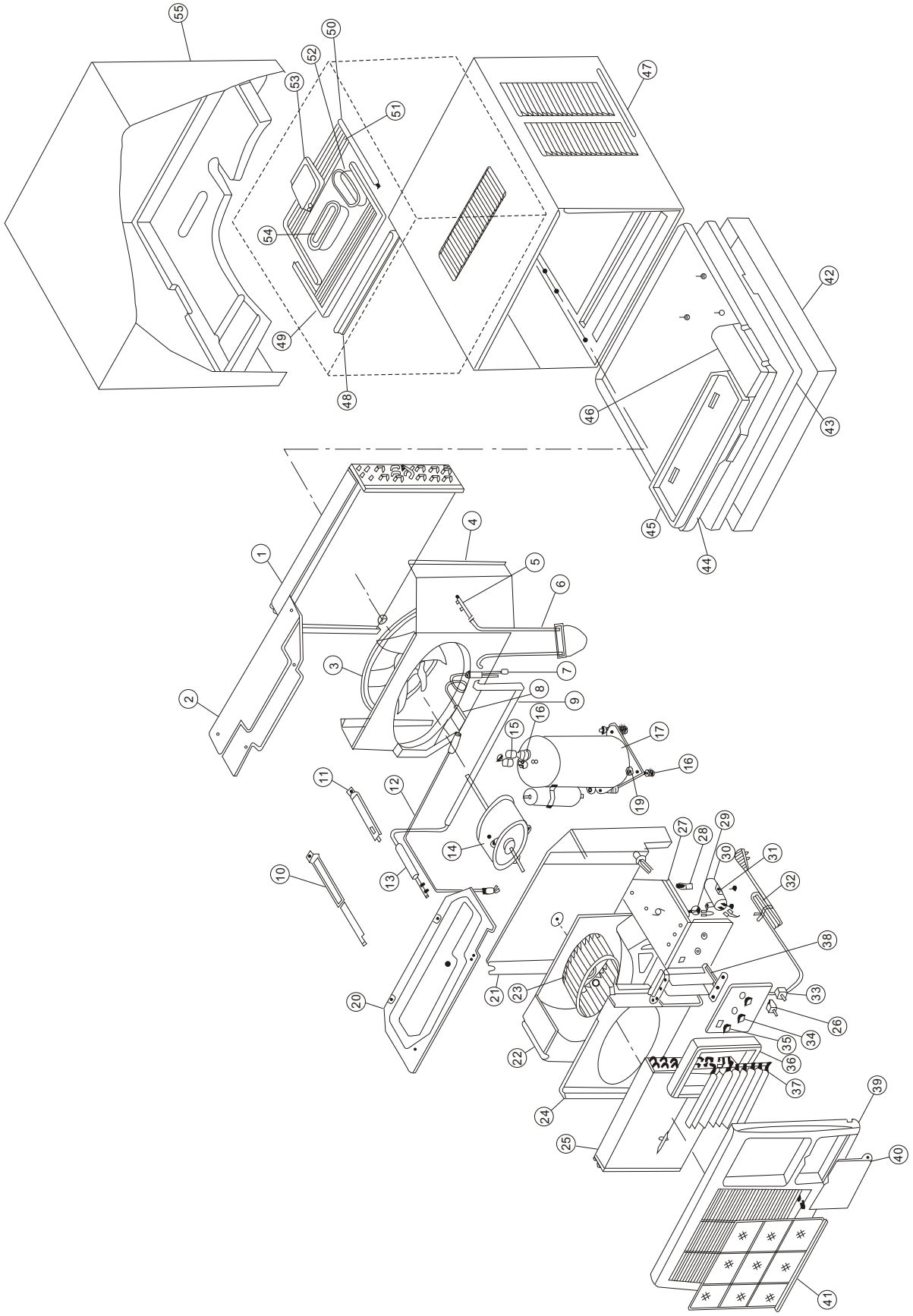
55
50
52
53
51
54
49
48
47
42
46
43
45
44
4
1
5
6
3
7
2
8
9
16
15
17
16
19
11
12
14
10
13
27
28
29
30
31
32
38
20
21
23
33
26
34
35
36
22
37
39
24
25
40
41

## HW-18CC03

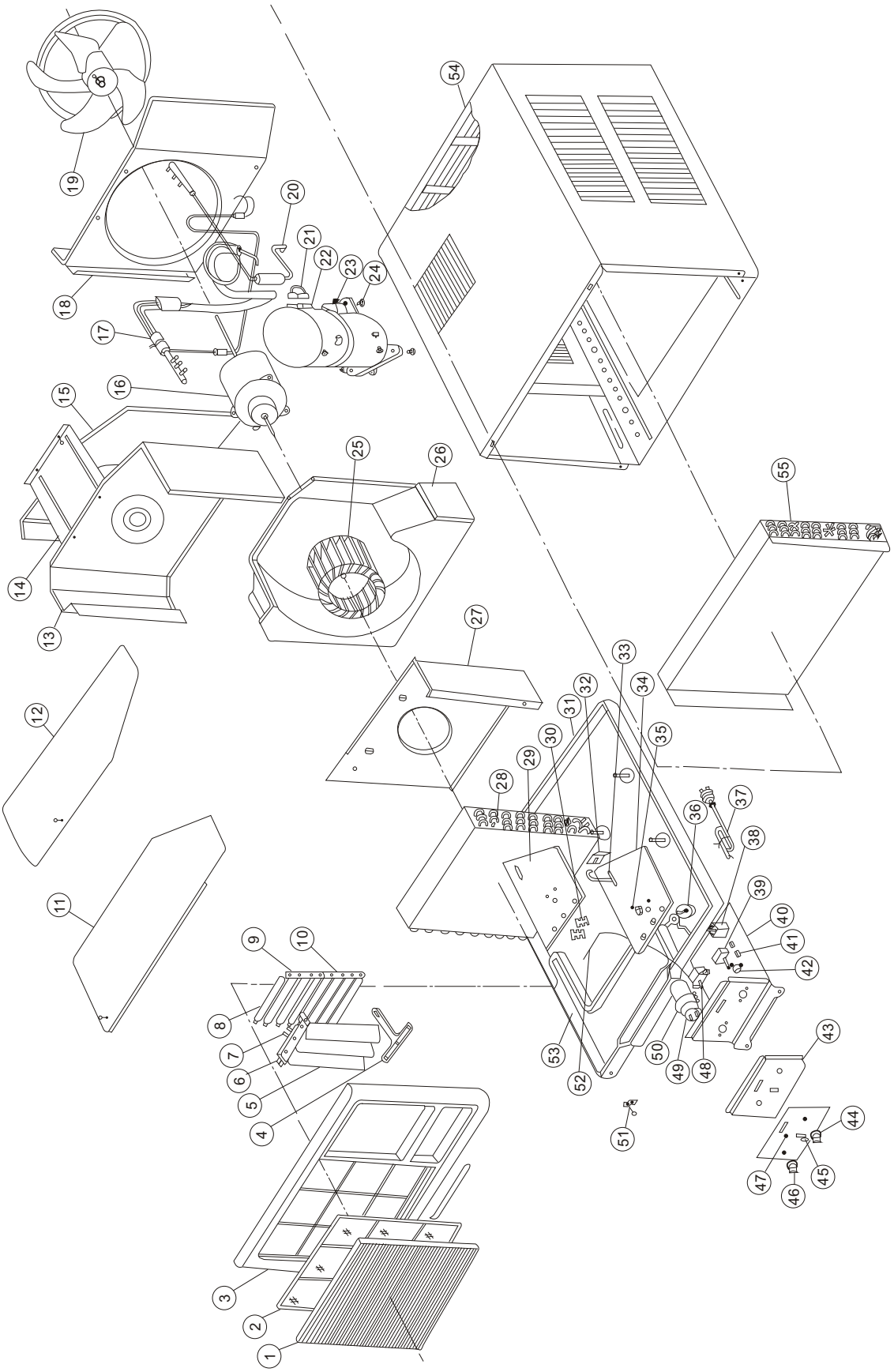
1
2
3
4
5
6
7
8
9
10
11
12
13
14
15
16
17
18
19
20
21
22
23
24
25
26
27
28
29
30
31
32
33
34
35
36
37
38
39
40
41
42
43
44
45
46
47
48
49
50
51
52
53
54
55

## HW-18HA03

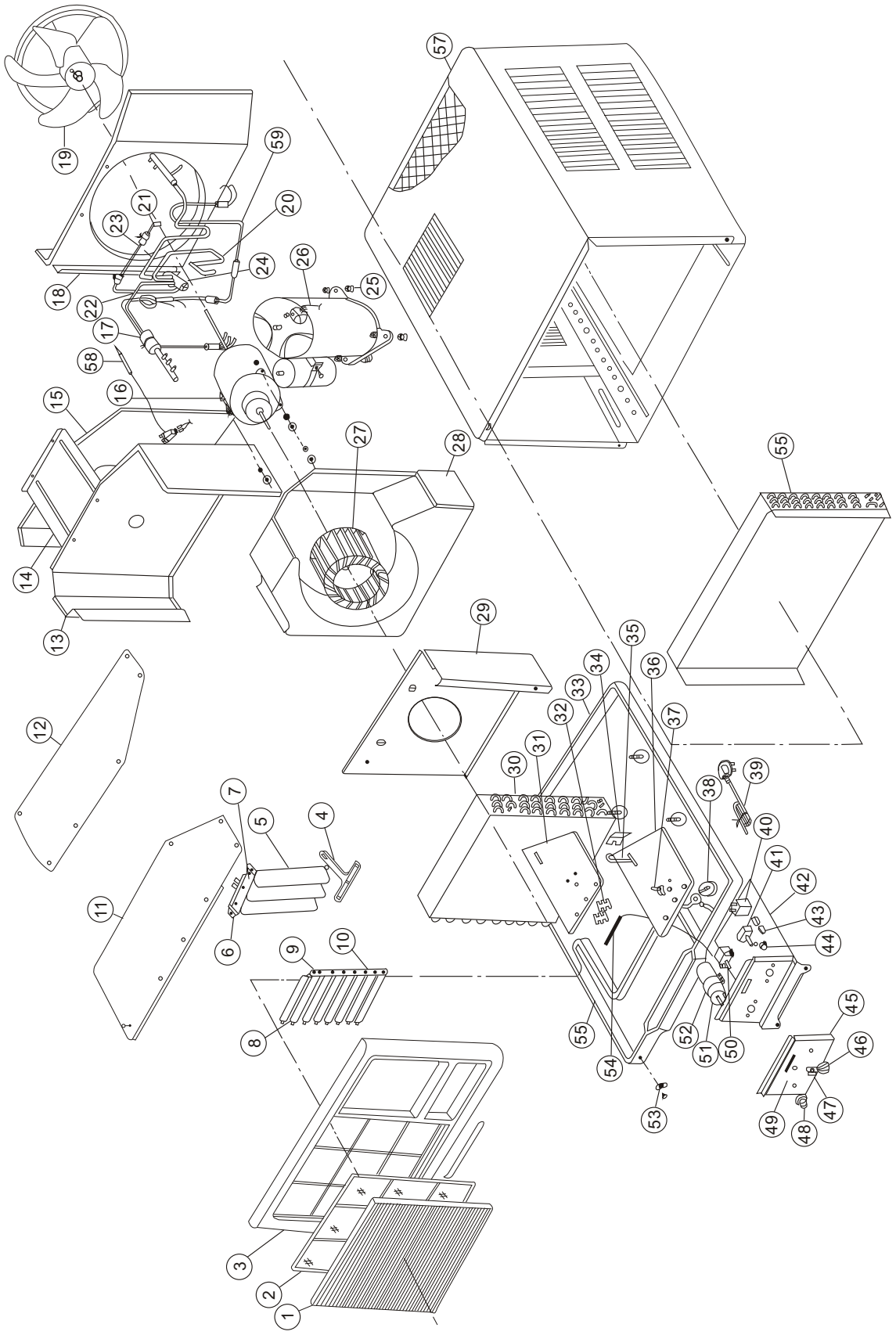
1
2
3
4
5
6
7
8
9
10
11
12
13
14
15
16
17
18
19
20
21
22
23
24
25
26
27
28
29
30
31
32
33
34
35
36
37
38
39
40
41
42
43
44
45
46
47
48
49
50
51
52
53
54
55
55
57
58
59

## HW-07CA03

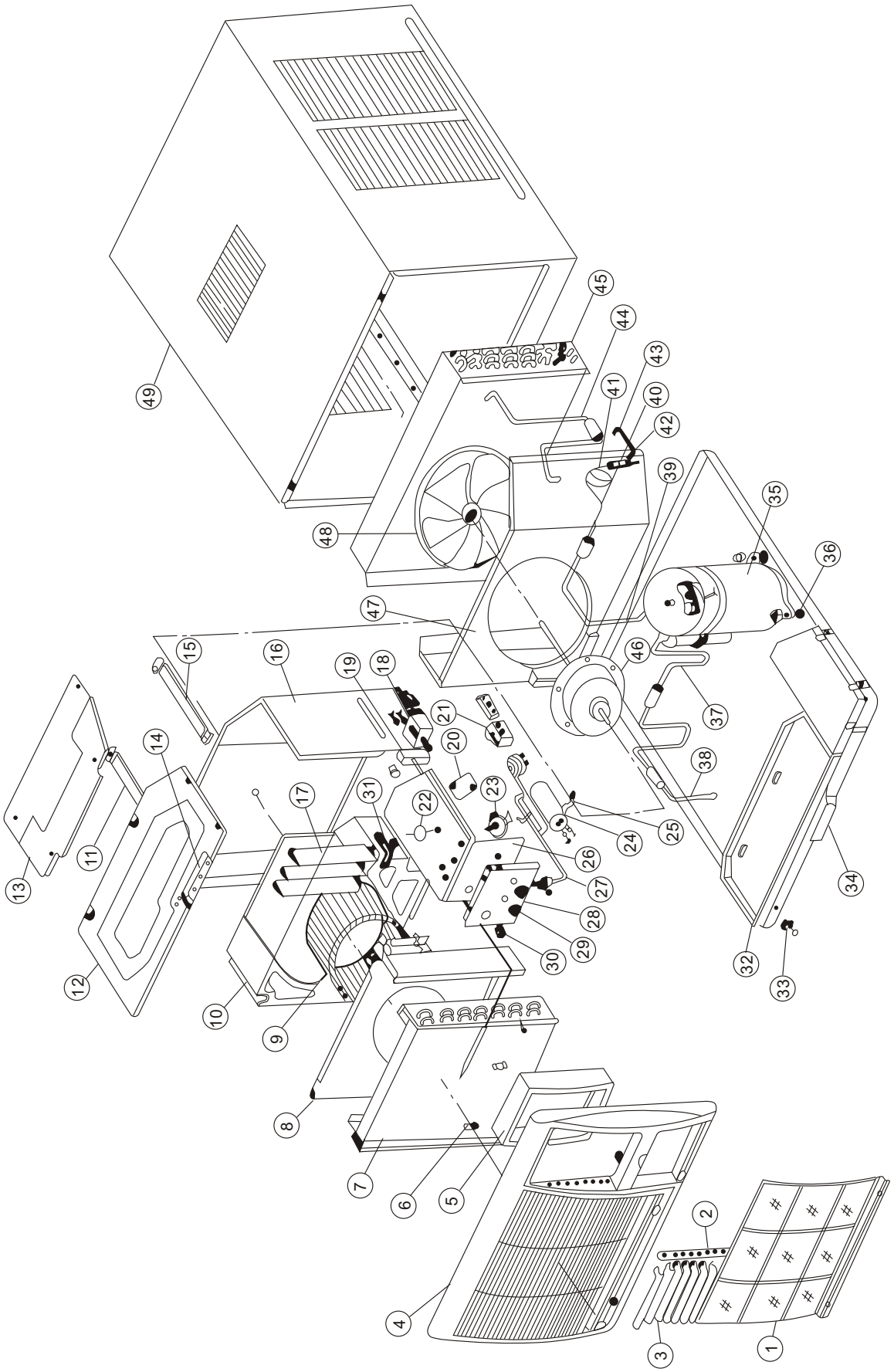
1
2
3
4
5
6
7
8
9
10
11
12
13
14
15
16
17
18
19
20
21
22
23
24
25
26
27
28
29
30
31
32
33
34
35
36
37
38
39
40
41
42
43
44
45
46
47
48
49

## HW-07HA03

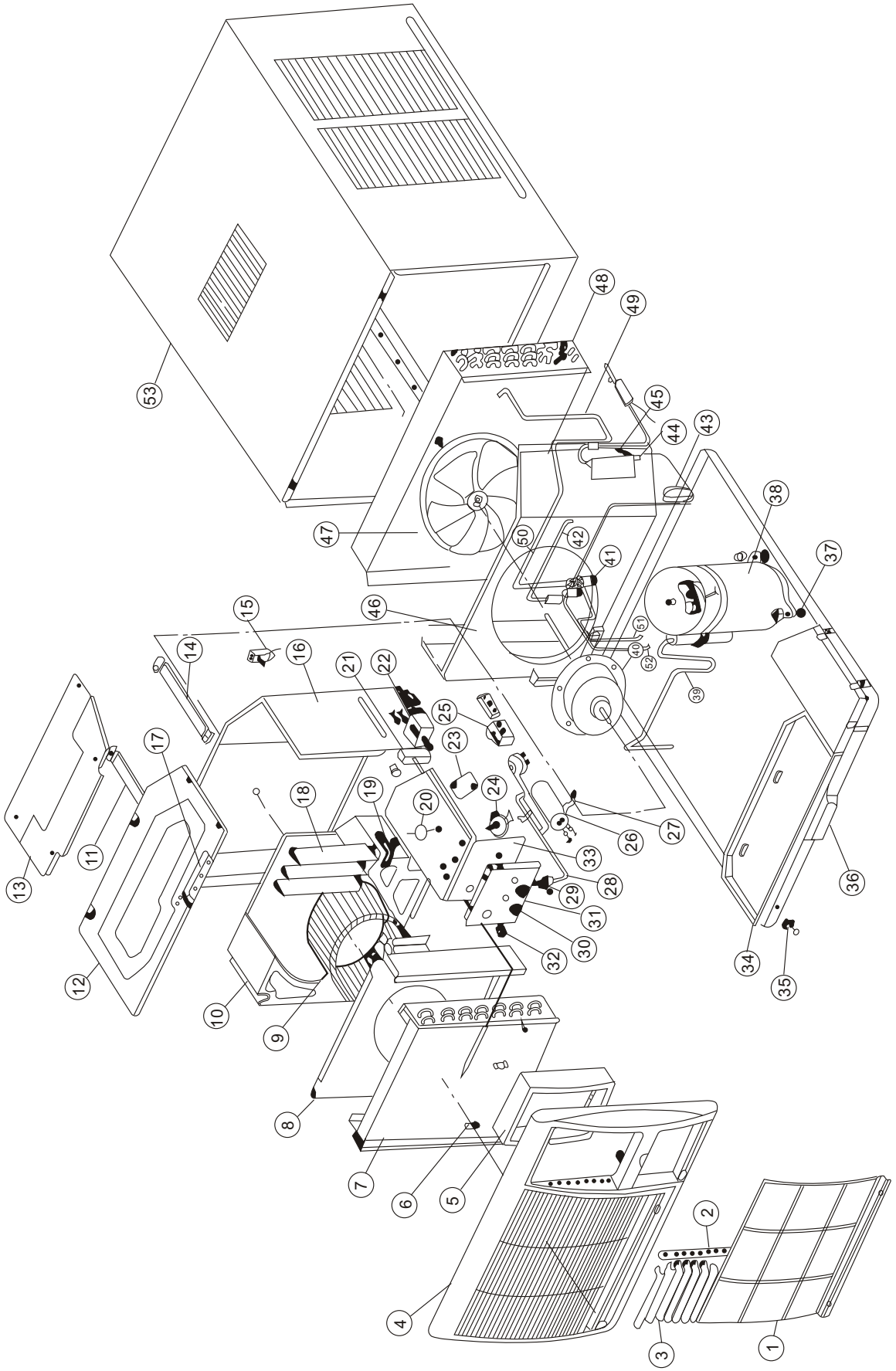
53
48
49
45
44
43
38
37
47
50
42
41
15
46
51
40
52
39
14
16
21
22
25
23
17
18
19
20
24
26
27
33
28
29
31
30
32
13
11
12
10
9
8
7
6
5
4
3
2
1
34
35
36

## HW-07HA03

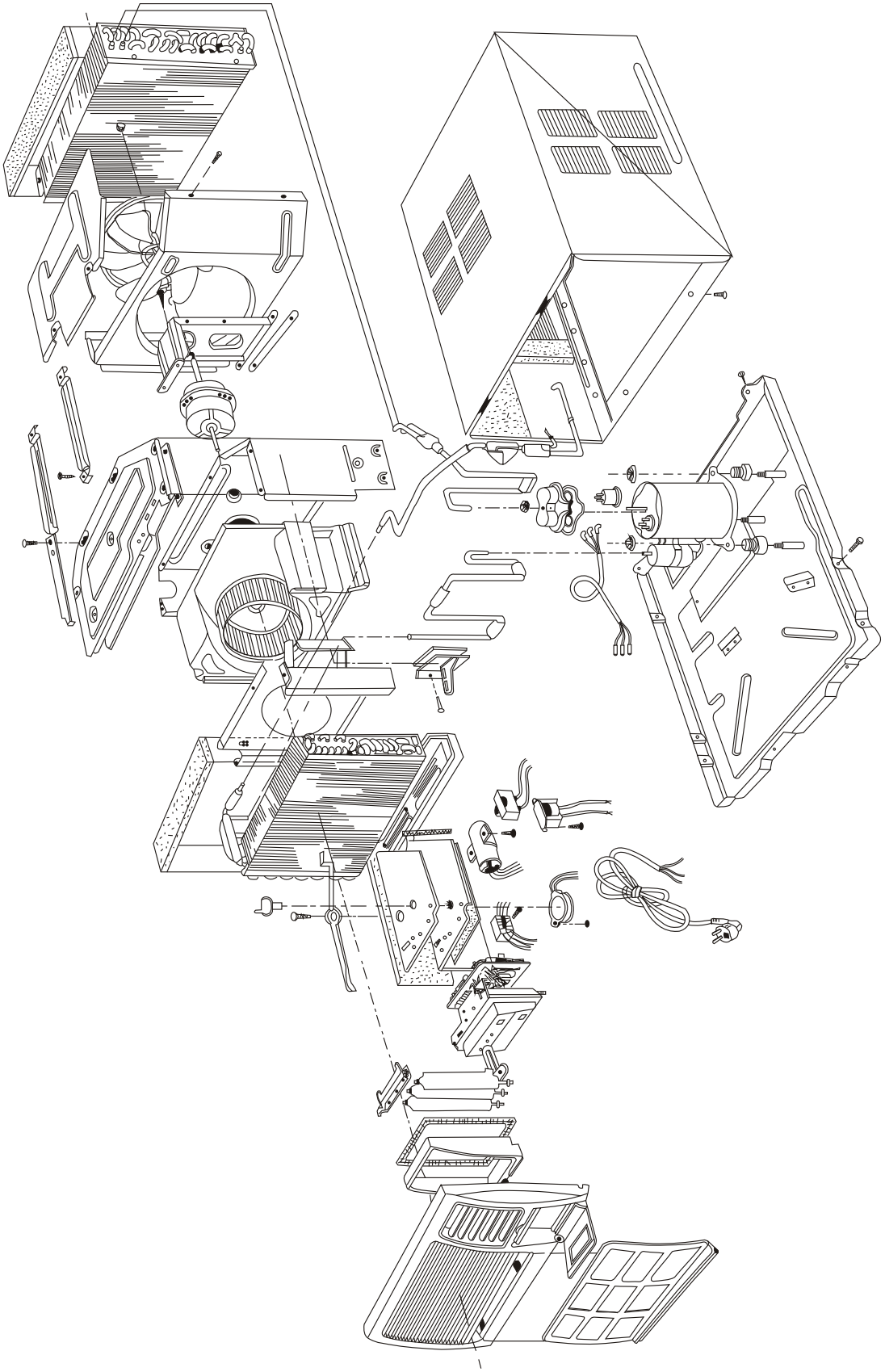

## HW-12HA03

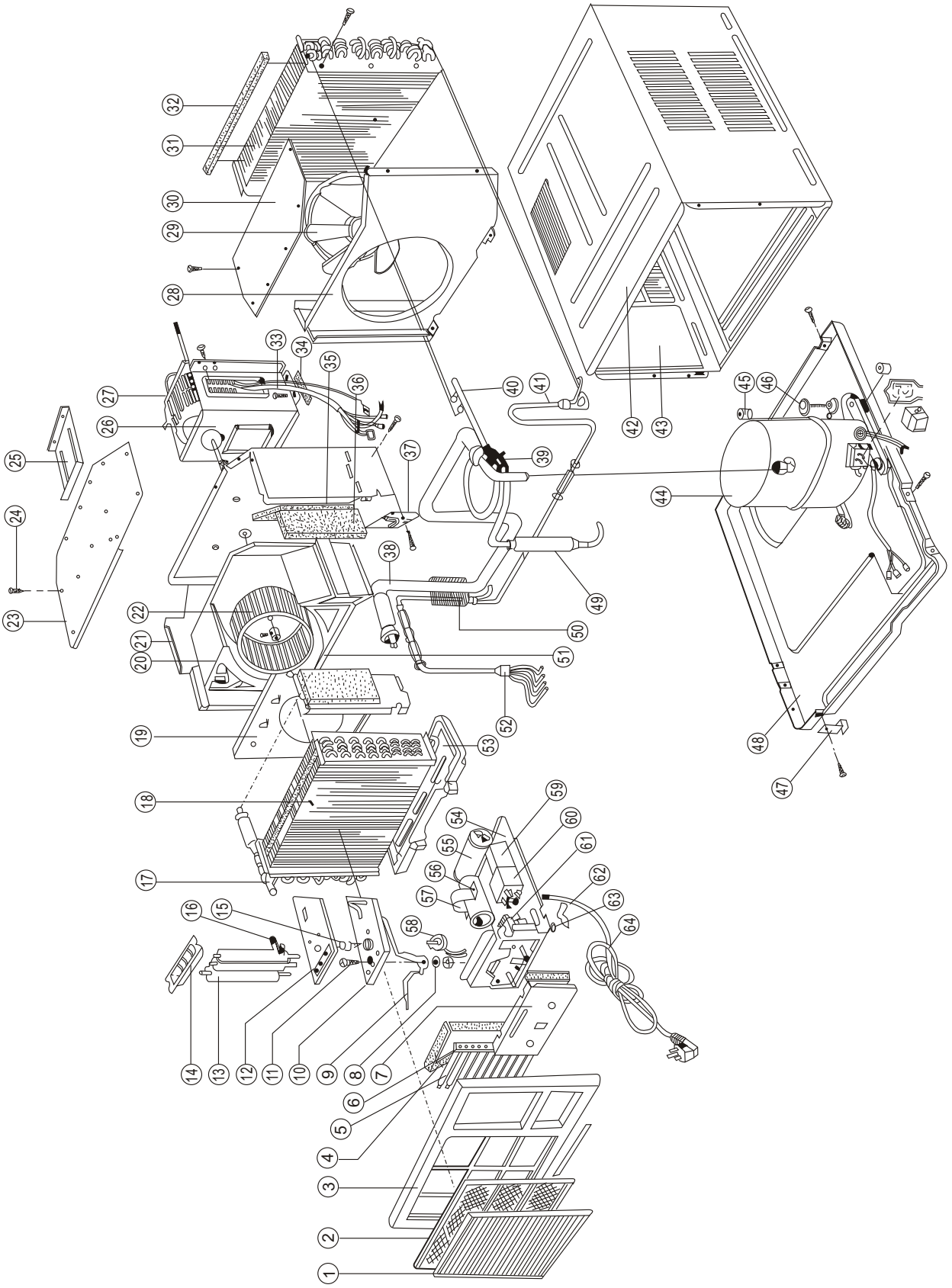
1
2
3
4
5
6
7
8
9
10
11
12
13
14
15
16
17
18
19
20
21
22
23
24
25
26
27
28
29
30
31
32
33
34
35
36
37
38
39
40
41
42
43
44
45
46
47
48
49
50
51
52
53
54
55
56
57
58
59
60
61
62
63
64

# HW-12CA03

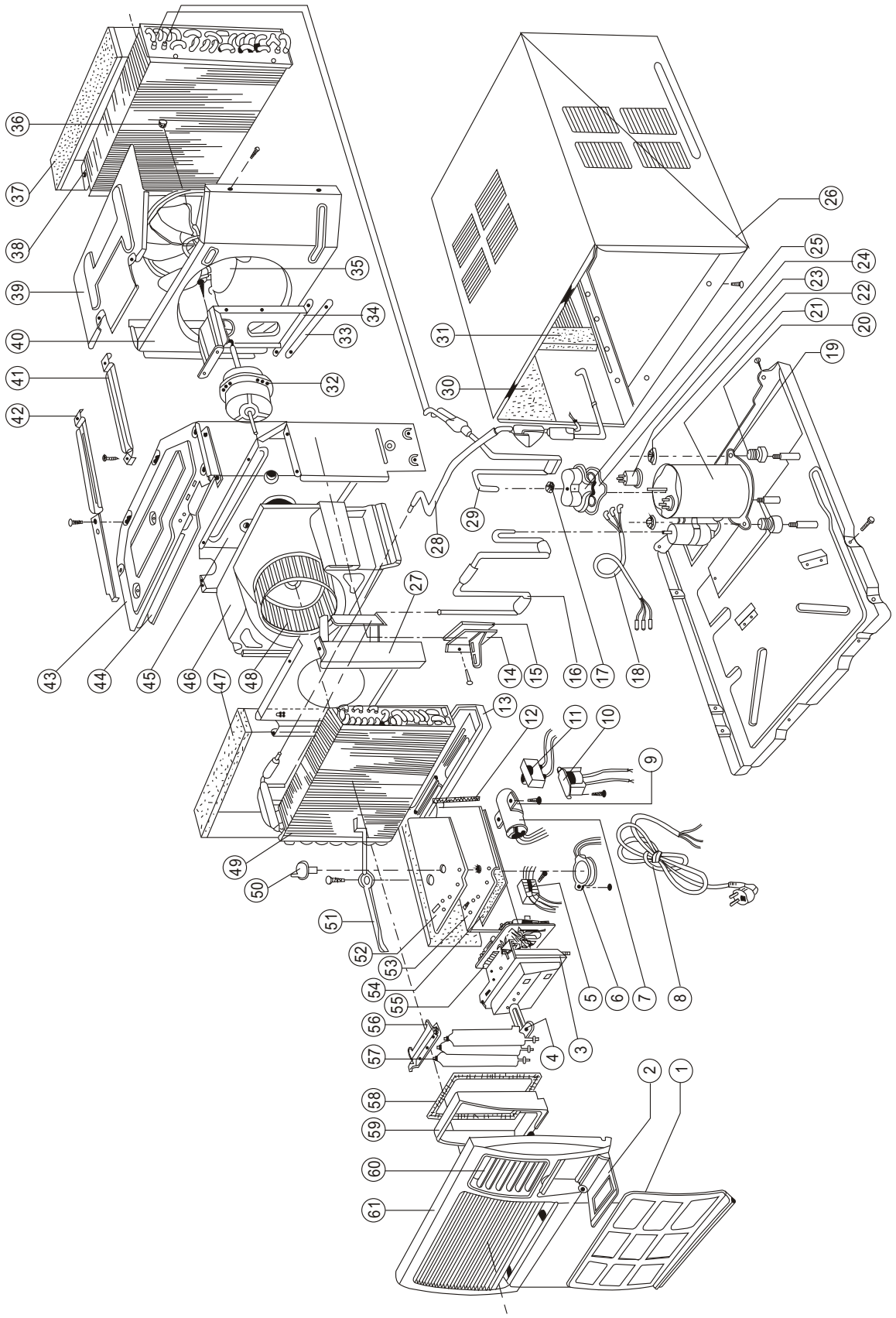
36
37
38
39
40
41
42
43
44
45
46
47
48
49
50
51
52
53
54
55
56
57
58
59
60
61
35
34
33
32
31
30
29
28
27
26
25
24
23
22
21
20
19
18
17
16
15
14
13
12
11
10
9
8
7
6
5
4
3
2
1

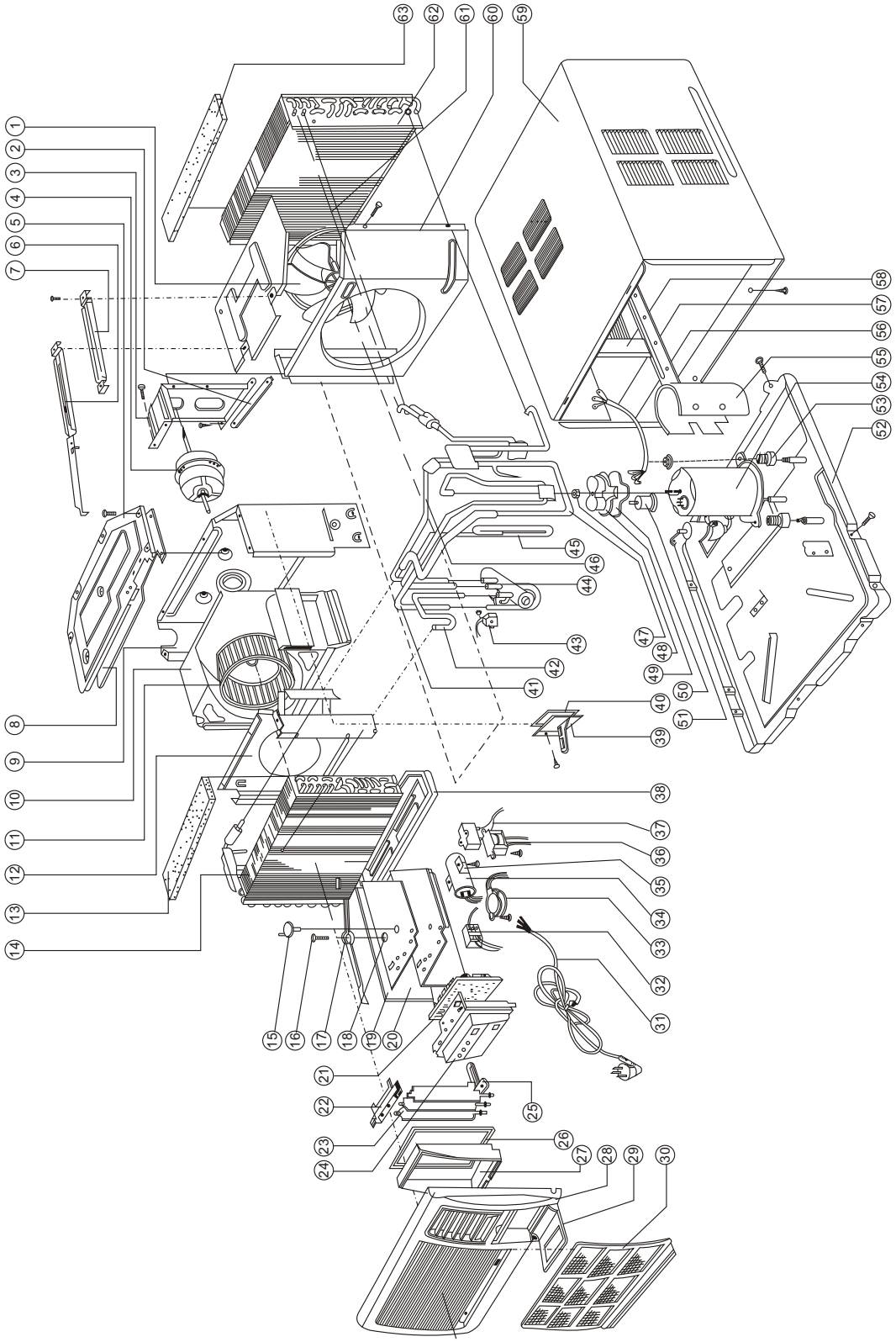
63
62
61
60
59
1
2
3
4
5
6
7
58
57
56
55
54
53
52
45
46
44
43
42
41
47
48
49
50
51
40
39
8
9
10
11
12
13
14
38
37
36
35
34
33
32
31
15
16
17
18
19
20
21
22
23
24
25
26
27
28
29
30

MODEL：HW-07CB12

| No | Parts'name | special No | damageable parts(yes or no) | Cost price |
|---|---|---|---|---|
| 1 | filter | 2400134 | No | |
| 2 | knob | 1431986 | No | |
| 3 | door | 1433981 | No | |
| 4 | bolt | 5002302 | No | |
| 5 | spacing reed | 1301829 | No | |
| 6 | horizontal blade | 1433982 | No | |
| 7 | vertical flap | 1436984 | No | |
| 8 | connecting rod | 1436985 | No | |
| 9 | front panel | 1233352 | No | |
| 10 | main vertical flap | 1436983 | No | |
| 11 | curtain | 1439989 | No | |
| 12 | left curtain frame | 1433987 | No | |
| 13 | top guide | 1301840 | No | |
| 14 | case | 1301842 | No | |
| 15 | scale | 1433993 | No | |
| 16 | cushion for electric box | 17341260 | No | |
| 17 | top cover of electric box | 1301834 | No | |
| 18 | fan motor | 3600235 | Yes | |
| 19 | capacitor clip | 1301833 | No | |
| 20 | thermostat | 3400186 | Yes | |
| 21 | selecting switch | 3400185 | No | |
| 22 | right curtain frame | 1433988 | No | |
| 23 | bottom cover of electric box | 1301832 | No | |
| 24 | compressor capacitor | 3600236 | Yes | |
| 25 | wire | 4200173 | No | |
| 26 | left bottom guide | 1301841 | No | |
| 27 | water meeting plate | 1233351 | No | |
| 28 | evaperator | 6400192 | No | |
| 29 | scroll case | 1433980 | No | |
| 30 | bolt for scroll case | 5002291 | No | |
| 31 | draught partition board | 1433990 | No | |
| 32 | front partition board | 1433991 | No | |
| 33 | acentric fan | 2300093 | Yes | |
| 34 | motor | 3000217 | Yes | |
| 35 | rear partition board group | 1436992 | No | |
| 36 | axial fan | 2300094 | No | |
| 37 | left pipe board of condenser | 1301837 | No | |
| 38 | condenser | 0400187 | No | |
| 39 | flange bolt nut | 5102004 | No | |
| 40 | bolt | 5002013 | No | |
| 41 | seal panel | 1301839 | No | |
| 42 | right pipe board of condense | 1301838 | No | |
| 43 | bolt | 5002089 | No | |

| | | | | |
|---|---|---|---|---|
| 44 | discharing pipe | 21111425 | No | |
| 45 | suction pipe | 21111424 | No | |
| 46 | wire holder cover | 1431185 | No | |
| 47 | supper-cooling pipe | 21111419 | No | |
| 48 | compressor | 2000182 | Yes | |
| 49 | capaliary | 2611325 | No | |
| 50 | liquid charging pipe of evape | 0500600 | No | |
| 51 | suction pipe | 0500601 | No | |
| 52 | flange bolt nut | 5102015 | No | |
| 53 | cushion rubber | 17541299 | No | |
| 54 | sealing pad | 17541297 | No | |
| 55 | foot bolt | 5002300 | No | |
| 56 | compressor cushion | 17341263 | No | |
| 57 | right pipe board of evaporator | 13011010 | No | |
| 58 | bolt | 5002036 | No | |
| 59 | chassis | 13011843 | No | |
| 60 | right-bottom guide | 1301919 | No | |
| 61 | left pipe board of evaporator | 1301109 | No | |
| 62 | drain elbow | 2111057 | No | |
| 63 | partition pad | | No | |
| 64 | dert-proof bag | 6134083 | No | |
| 65 | top packaging pad | 6233231 | No | |
| 66 | packaging box | 6066985 | No | |
| 67 | bottom packaging pad | 6233232 | No | |
| 68 | packaging box bottom | 6066335 | No | |

MODEL：HW-07HA03

| No | Parts'name | special No | parts(yes or no) | Cost price |
|---|---|---|---|---|
| 1 | filter | 2400078 | No | |
| 2 | connecting pole | 1431469 | No | |
| 3 | horizontal blade | 1431471 | No | |
| 4 | panel | 1231129 | No | |
| 5 | draught foam | 1433483A | No | |
| 6 | thermostat clip | 1431074 | No | |
| 7 | evaporator group | 0400019 | No | |
| 8 | partition board of evaparate | 1101021 | No | |
| 9 | acentric fan group | 0300013 | Yes | |
| 10 | worm shell | 1233013 | No | |
| 11 | long bracket | 1301048 | No | |
| 12 | front cover board | 1301051 | No | |
| 13 | rear cover board | 1301046 | No | |
| 14 | short bracket | 1301054 | No | |
| 15 | defrost thermostat | 3400192 | Yes | |
| 16 | front partition board | 1301759 | No | |
| 17 | upper backstop | 1431078 | No | |
| 18 | erect blade | 1431079 | No | |
| 19 | lower backstop | 1331080A | No | |
| 20 | driving handle | 1431148 | No | |
| 21 | thermostat | 3200003 | Yes | |
| 22 | selecting switch | 3400198 | No | |
| 23 | terminal block | 4000082 | No | |
| 24 | synchronous motor | 3000012 | Yes | |
| 25 | fan motor capacitor | 3600034 | Yes | |
| 26 | compressor capacitor | 3600007A | Yes | |
| 27 | capacitor clip | 5701015 | No | |
| 28 | wire | 4200099 | No | |
| 29 | wire clip | 5745016 | No | |
| 30 | knob | 1431075 | No | |
| 31 | scale plate | 1300758 | No | |
| 32 | ship style switch | 3000008 | No | |
| 33 | electric body | 1301052 | No | |
| 34 | water meeting plate | 1433076 | No | |
| 35 | stop part | 1301054 | No | |
| 36 | chassis | 1101023 | No | |
| 37 | shock absorbing cushion | 17561204 | No | |
| 38 | compressor | 200104 | No | |
| 39 | suction pipe | 21111225 | No | |
| 40 | motor | 3000011 | No | |

| | | | | |
|---|---|---|---|---|
| 41 | four-way valve | 2500011 | No | |
| 42 | discharge pipe | 21111226 | No | |
| 43 | main capaliary | 2611273 | No | |
| 44 | unilateralism valve | 2500010 | Yes | |
| 45 | filter | 2411023 | No | |
| 46 | rear partition board | 1101019 | No | |
| 47 | axial fan | 2331018 | Yes | |
| 48 | condenser group | 0400020 | No | |
| 49 | charge pipe 1 | 21111221 | No | |
| 50 | charge pipe 2 | 21111228 | No | |
| 51 | discharge pipe | 2111161 | No | |
| 52 | liquid charging pipe | 2111162 | No | |
| 53 | shell cover | 1101018 | No | |

MODEL：HW-09CB12

| No | Parts'name | special No | damageable parts(yes or no) | Cost price |
|---|---|---|---|---|
| 1 | condenser group | 0400190 | No | |
| 2 | rear covergroup | 0100054 | No | |
| 3 | axial fan | 2331017 | Yes | |
| 4 | rear partition boardgroup | 0100055 | No | |
| 5 | charge pipe of condenser | 0100580 | No | |
| 6 | discharge pipe | 21111447 | No | |
| 7 | supper-cooling pipe group | 0500587 | No | |
| 8 | charge pipe 2 of evaperaror | 2111162 | No | |
| 9 | suction pipe group | 0500603 | No | |
| 10 | long bracket | 1301048 | No | |
| 11 | short bracket | 1301056 | No | |
| 12 | liquid charging pipe 2 of evaperaror | 0500589 | No | |
| 13 | suction pipe group of evaperaror | 0500588 | No | |
| 14 | asynchronic motor | 3000255 | Yes | |
| 15 | wire holder cover | 14311191 | No | |
| 16 | overload protector | 3100140 | Yes | |
| 17 | compressor | 2000183 | Yes | |
| 18 | compressor cushion | 17561304 | No | |
| 19 | flange bolt nut | 5102050 | No | |
| 20 | front cover group | 0100814 | No | |
| 21 | front partition board group | 0100838 | No | |
| 22 | scroll shell group | 0100057 | No | |
| 23 | acentric fan group | 0300013 | No | |
| 24 | partition board group of evaperaror | 0100058 | No | |
| 25 | evaporator group | 0400191 | No | |
| 26 | thermostat | 3400193 | Yes | |
| 27 | electric body | 1301999 | No | |
| 28 | fan motor capacitor | 3600218 | Yes | |
| 29 | synchronic motor | 3000272 | Yes | |
| 30 | compressor capacitor | 3600131 | Yes | |
| 31 | capacitor clip | 5701003 | No | |
| 32 | wire | 4200184 | No | |
| 33 | slection switch | 3400186 | Yes | |
| 34 | knob | 14311192 | Yes | |
| 35 | ship style switch | 3400008 | Yes | |
| 36 | panel pad group | 0100837 | No | |
| 37 | horizontal blade | 1431471 | No | |
| 38 | wind outlet group | 0100061 | No | |
| 39 | casing of panel | 1231129 | No | |
| 40 | controll door | 14311190 | No | |

| | | | | |
|---|---|---|---|---|
| 41 | filter | 2400078 | No | |
| 42 | bottom of packaging box | 6066030 | No | |
| 43 | packaging pad | 6233028 | No | |
| 44 | chassis group | 0100839 | No | |
| 45 | water meeting plate | 1433076 | No | |
| 46 | pad of eletric box | 1733204 | No | |
| 47 | casing | 0100836 | No | |
| 48 | upper fixing bar | 1301714 | No | |
| 49 | left draught rod | 1301712 | No | |
| 50 | right draught rod | 1301713 | No | |
| 51 | curtain | 1439888 | No | |
| 52 | foam sealed bar | 1442885 | No | |
| 53 | bag | / | No | |
| 54 | window sealed bar | 1434886 | No | |
| 55 | package | 6066986 | No | |

MODEL：HW09C03

| No | Parts'name | special No | damageable parts(yes or no) | Cost price |
|---|---|---|---|---|
| 1 | wind inlet bar | 1432085 | No | |
| 2 | foam of draught | 1733176 | No | |
| 3 | pad of draught | 1742691 | No | |
| 4 | blade of wind outtlet bar | 1431079 | No | |
| 5 | upper support | 1431078 | No | |
| 6 | pad | 1742650 | No | |
| 7 | scale | 1324671 | No | |
| 8 | electric body | 1301052 | No | |
| 9 | upper pad of electric body | 1734208 | No | |
| 10 | water meeting plate | 1431045 | No | |
| 11 | clip of thermostat | 1431074 | No | |
| 12 | driving handle | 1433148 | No | |
| 13 | evaporator group | 0400019 | No | |
| 14 | partition board group of evaperaror | 0100058 | No | |
| 15 | scroll shell | 1233013 | No | |
| 16 | acentric fan group | 0300013 | No | |
| 17 | pad of scroll shell side | 1742196 | No | |
| 18 | pad | 1742197 | No | |
| 19 | front cover | 1301051 | No | |
| 20 | long bracket | 1301048 | No | |
| 21 | short bracket | 1301056 | No | |
| 22 | rear cover | 1301046 | No | |
| 23 | condenser group | 0400020 | No | |
| 24 | right pipe board of condenser | 2201026 | No | |
| 25 | bolt nut | 5102046 | No | |
| 26 | axial fan | 2331017 | Yes | |
| 27 | rear cover group | 0100055 | No | |
| 28 | motor | 3000013 | Yes | |
| 29 | high perss discharge pipe | 2111167 | No | |
| 30 | heat insulation pipe | 1756819 | No | |
| 31 | shake absorbtion clay | 1755497A | No | |
| 32 | wire holder cover | 1440940 | No | |
| 33 | bolt nut | 51002004 | No | |
| 34 | clay | 1754113 | No | |
| 35 | suction pipe | 2111168 | No | |
| 36 | front partition board | 1101020 | No | |
| 37 | compressor capacitor | 3600034 | No | |
| 38 | capacitor clip | 5701014 | No | |
| 39 | relay | 3100012 | Yes | |
| 40 | terminal block | 4000004 | Yes | |

| | | | | |
|---|---|---|---|---|
| 41 | synchronic motor | 3000012 | No | |
| 42 | fan motor capacitor | 3600007A | No | |
| 43 | wire bundle | 4400335 | No | |
| 44 | chassis | 1101023 | No | |
| 45 | stop parts | 1301054 | No | |
| 46 | guiding  wire hood | 1751203 | No | |
| 47 | bottom bracket | 1431080A | Yes | |
| 48 | knob parts | 0700002 | Yes | |
| 49 | thermostat | 3200003 | No | |
| 50 | timer | 8500001 | No | |
| 51 | pad of eletric box | 1733204 | No | |
| 52 | wire | 4200004 | No | |
| 53 | filter | 2436030 | No | |
| 54 | door | 1432082 | No | |
| 55 | panel frame | 1231344 | No | |
| 56 | horizontal blade | 1431067 | No | |
| 57 | bolt 4X10TAHC | 5002013 | No | |
| 58 | casing | 17541470 | No | |
| 59 | shake absorbtion clay | 17551345 | No | |
| 60 | casing | 1101018 | No | |
| 61 | fixing board | 1301055 | No | |
| 62 | front draught board | 1301044 | No | |
| 63 | pad of shell cover | 1742184 | No | |
| 64 | filter group | 0900020 | No | |
| 65 | flange bolt nut | 5102050 | | |
| 66 | compressor | 2000015 | | |

MODEL：HW12CA12

| No | Parts'name | special No | damageable parts(yes or no) | Cost price |
|---|---|---|---|---|
| 1 | filter | 2436037 | No | |
| 2 | controll door | 14311187 | No | |
| 3 | panel | 1231024B | No | |
| 4 | draught foam | 1431157A | No | |
| 5 | asway switch | 3400186 | No | |
| 6 | knob | 14311192 | No | |
| 7 | scale plate | 13211001 | No | |
| 8 | horizontal blade | 1431154 | No | |
| 9 | connecting rod | 1431155 | No | |
| 10 | thermostat | 3400037 | Yes | |
| 11 | selecting switch | 3400186 | Yes | |
| 12 | capacitor clip | 5701023 | No | |
| 13 | running capacitor | 3600143 | Yes | |
| 14 | wire | 4200184 | No | |
| 15 | electric body | 1301996 | No | |
| 16 | driving handle | 1431148 | No | |
| 17 | vertical blade | 1431146A | No | |
| 18 | bottom holder | 1431080A | No | |
| 19 | synchronic motor | 3000272 | Yes | |
| 20 | fan motor capacitor | 3600134 | Yes | |
| 21 | evaporator group | 0400189 | No | |
| 22 | draught board | 1301100A | No | |
| 23 | scroll shell | 1233025B | No | |
| 24 | wind door | 1431152 | No | |
| 25 | front partition board | 1101031A | No | |
| 26 | axial fan | 2331021 | Yes | |
| 27 | acentric fan | 2331022 | Yes | |
| 28 | asynchrinic motor | 3000256 | Yes | |
| 29 | fan motor bracket | 1301104 | No | |
| 30 | packaging pad | 6233209 | No | |
| 31 | casing | 1301994 | No | |
| 32 | rear cover | 1301099 | No | |
| 33 | condenser group | 0400188 | No | |
| 34 | acentric fan | 2331022 | Yes | |
| 35 | front partition board | 1101032A | No | |
| 36 | discharge pipe group | 0500581 | No | |
| 37 | charge pipe 1 group | 0500580 | No | |
| 38 | liquid charging pipe group | 0500584 | No | |
| 39 | left handle | 1301105 | No | |
| 40 | suction pipe | 21111434 | No | |

| | | | | |
|---|---|---|---|---|
| 41 | right handle | 1301106 | No | |
| 42 | compressor cushion | 17561305 | No | |
| 43 | compressor | 2000184 | Yes | |
| 44 | wire holder box | 14311188 | No | |
| 45 | front cover | 1301098 | No | |
| 46 | water meeting plate | 0933027B | No | |
| 47 | chassis group | 0100845 | No | |
| 48 | packaging pad | 6233209 | No | |
| 49 | bottom plate of packaging box | 6066046A | No | |
| 50 | upper fixing bar | 1301717 | No | |
| 51 | left pulling rod | 1301715 | No | |
| 52 | right pulling rob | 1301716 | No | |
| 53 | upper fixied sealing bar | 1434889 | No | |
| 54 | foam bottom bar | 1442885 | No | |
| 55 | curtain | 1439890 | No | |
| 56 | bag | / | No | |

MODEL：HW-12H03

| No | Parts'name | special No | damageable parts(yes or no) | Cost price |
|---|---|---|---|---|
| 1 | filter | 2436037 | No | |
| 2 | horizontal blade | 1431154 | No | |
| 3 | connecting pole | 1431155 | No | |
| 4 | panel | 1231024 | No | |
| 5 | draught foam | 1433157 | No | |
| 6 | thermostat clip | 1436177 | No | |
| 7 | evaporator group | 0400030 | No | |
| 8 | drought parts | 0100101 | No | |
| 9 | acentric fan group | 2331022 | Yes | |
| 10 | worm shell | 1233025 | No | |
| 11 | front cover board | 1301098 | No | |
| 12 | rear cover board | 1301099 | No | |
| 13 | left handle | 1301105 | No | |
| 14 | blade axial board | 1431145 | No | |
| 15 | right handle | 1301106 | No | |
| 16 | front partition board | 1101031 | No | |
| 17 | erect blade | 1431146 | No | |
| 18 | fan motor capacitor | 3600011 | Yes | |
| 19 | terminal block | 4000012 | No | |
| 20 | dial | 1431148 | No | |
| 21 | earthing block | 4000011 | No | |
| 22 | synchronous motor | 3000021 | Yes | |
| 23 | ship style switch | 2400008 | Yes | |
| 24 | thermostat | 3400193 | Yes | |
| 25 | selecting switch | 3400198 | Yes | |
| 26 | wire clip | 5745106 | No | |
| 27 | wire | 4200010 | No | |
| 28 | electric body | 1301103 | No | |
| 29 | running capacitor | 3600010 | Yes | |
| 30 | capacitor clip | 5701023 | No | |
| 31 | water meeting plate | 0933027 | No | |
| 32 | stop part | 1301107 | No | |
| 33 | chassis | 1101030 | No | |
| 34 | ground screw | 05002033 | No | |
| 35 | compressor group | 0200029 | Yes | |
| 36 | pipe group | 0500165 | No | |
| 37 | liquid charging pipe | 2111443A | No | |
| 38 | supper-cooling pipe | 0500162B | No | |
| 39 | condenser group | 0400048A | No | |
| 40 | shell cover group | 0100095 | No | |
| 41 | axial fan | 2331021 | Yes | |
| 42 | rear partition board group | 0100098 | No | |
| 43 | fan motor bracket | 1301104 | No | |
| 44 | motor parts | 0100104 | Yes | |

MODEL：HW-12HA03

| No | Parts'name | special No | damageable parts(yes or no) | Cost price |
|---|---|---|---|---|
| 1 | axial fan | 2331021 | Yes | |
| 2 | cushion rubber | 1754312 | No | |
| 3 | fan motor bracket | 1301104 | No | |
| 4 | motor | 3000037 | Yes | |
| 5 | front cover | 1301098 | No | |
| 6 | left handle | 1301105 | No | |
| 7 | right handle | 1301106 | No | |
| 8 | front cover cushion | 1734272 | No | |
| 9 | front partition board | 1101031A | No | |
| 10 | scroll shell | 1233025B | No | |
| 11 | acentric fan | 2331022 | Yes | |
| 12 | draught door | 1301100A | No | |
| 13 | evaporator cushion | 1742281 | No | |
| 14 | evaporator | 0400030 | No | |
| 15 | driving handle | 1431148 | No | |
| 16 | bolt | 5002093 | No | |
| 17 | guiding rod | 1431149A | No | |
| 18 | cushion of electric body | 1734442 | No | |
| 19 | cushion of electric body | 1742443 | No | |
| 20 | electric body | 1301223A | No | |
| 21 | PC plate | 0600152 | Yes | |
| 22 | upper bracket | 1431078 | No | |
| 23 | vertical blade | 1431146A | No | |
| 24 | foundmental board box | 1431274 | No | |
| 25 | bottom bracket of wind outler | 1431080A | No | |
| 26 | draught foam pad | 1742278 | No | |
| 27 | draught foam | 1433157A | No | |
| 28 | panel | 1231340 | No | |
| 29 | controll door | 1431273 | No | |
| 30 | filter | 2436037 | No | |
| 31 | wire | 4200087 | No | |
| 32 | terminal block | 4000082 | No | |
| 33 | synchronic motor | 3000038 | Yes | |
| 34 | running capacitor | 3600032 | Yes | |
| 35 | clip | 5701003 | No | |
| 36 | transformer | 3800052 | Yes | |
| 37 | fan motor capacitor | 3600007A | Yes | |
| 38 | water meeting plate | 0933027B | No | |
| 39 | wind door | 1431152 | No | |
| 40 | pad of wind door | 1742310 | No | |

| | | | | |
|---|---|---|---|---|
| 41 | discharge pipe | 2111447 | No | |
| 42 | discharge pipe | 2111446 | No | |
| 43 | coil of four-way valve | 2500038 | No | |
| 44 | four-way valve | 2500015 | Yes | |
| 45 | charge pipe | 2111449 | No | |
| 46 | discharge pipe group | 0500163 | No | |
| 47 | liquid charging pipe | 2111443A | No | |
| 48 | bolt nut | 5102004 | No | |
| 49 | wire holder cover | 14401133 | No | |
| 50 | clip of wire holder cover | 17561266 | No | |
| 51 | overload protector | 3100093 | Yes | |
| 52 | chassis | 1101030 | No | |
| 53 | cushion absorbtion | 17561265 | No | |
| 54 | compressor | 2000039 | Yes | |
| 55 | sound absorbtion pad | 17622207 | No | |
| 56 | wire bundle group | 4400258 | No | |
| 57 | cushion of casing | 1734267 | No | |
| 58 | cushion of casing | 1734266 | No | |
| 59 | casing | 1101029 | No | |
| 60 | rear partition board | 1101032A | No | |
| 61 | rear cover | 1301099 | No | |
| 62 | condenser | 0400048A | No | |
| 63 | condenser cushion | 1742280A | No | |

## b.LIST OF COMPONENTS

HW-18CC03

| NO. | Special NO. | Name | Quantity | description | Damageable parts(yes or no) | Cost price |
|---|---|---|---|---|---|---|
| 1. | 1231245 | Air-inlet bar | 1 | | No | |
| 2. | 2400105 | Filter | 1 | | No | |
| 3. | 1231246 | Font panel | 1 | | No | |
| 4. | 1231251 | Underneath support | 1 | | No | |
| 5. | 1231250 | Vertical louver | 1 | | No | |
| 6. | 1231249 | Immobility box | 1 | | No | |
| 7. | 1734960 | Pad | 1 | | No | |
| 8. | 1231247 | Horizontal louver | 8 | | No | |
| 9. | 1231248 | Synchronous pole | 1 | | No | |
| 10. | 1231248 | Synchronous pole | 1 | | No | |
| 11. | 1301518 | Front cover plate | 1 | | No | |
| 12. | 1301517 | Back cover plate | 1 | | No | |
| 13. | 1301521 | Front partition plate | 1 | | No | |
| 14. | 1301526 | Support plate | 1 | | No | |
| 15. | 1742754 | Front partition plate pad | 1 | | No | |
| 16. | 3000167 | Fan motor | 1 | | Yes | |
| 17. | 0500391 | Liquid-divide pipe assembly | 1 | | No | |
| 18. | 1301530 | Back partition plate | 1 | | No | |
| 19. | 2331061 | Centrifugal fan | 1 | | Yes | |
| 20. | 0500424 | Suction pipe assembly | 1 | | No | |
| 21. | 1431783 | Wire holder cover | 1 | | No | |
| 22. | 2000113 | Compressor | 1 | | Yes | |
| 23. | 1751965 | Cushion rubber | 1 | | No | |
| 24. | 5002013 | Bolt | 1 | | | |
| 25. | 2332063 | Centrifugal fan assembly | 1 | | No | |
| 26. | 1233252 | Scroll case | 1 | | No | |
| 27. | 1301520 | Evaporator partition plate | 1 | | No | |
| 28. | 0400122 | Evaporator assembly | 1 | | No | |
| 29. | 1742952 | Electric box cover plate pad | 1 | | No | |
| 30. | 5701100 | Thermostat clip | 1 | | No | |
| 31. | 1301524 | Bottom plate | 1 | | No | |
| 32. | 1231253 | Fresh air door | 1 | | No | |
| 33 | 1303522 | Drawing pole | 1 | | No | |
| 34. | 1236255 | Electric box cover plate | 1 | | No | |
| 35. | 1231258 | Rotation handle | 1 | | No | |
| 36. | 3000168 | Synchro motor | 1 | | Yes | |
| 37. | 4200117 | Power cord | 1 | | No | |

| | | | | | | |
|---|---|---|---|---|---|---|
| 38. | 3600218 | Fan motor capacitor | 1 | Yes | | |
| 39. | 3400145 | Base line bank | 1 | No | | |
| 40. | 1301528 | Electric box | 1 | No | | |
| 41. | 4000011 | Line contact bank | 1 | No | | |
| 42. | 5736092 | Power cord clip | 1 | No | | |
| 43. | 1324670 | Control panel | 1 | No | | |

Model:HW-18HA03

| NO. | Special NO. | Name | Quantity | description | Damageable parts(yes or no) | Cost price |
|---|---|---|---|---|---|---|
| 1 | 0100257 | Front grill assembly | 1 | | No | |
| 2 | 0100619 | Drought foam | 1 | | No | |
| 3 | 1752795<br>1752796 | Pad | 2 | | No | |
| 4 | 1231249 | Immobility box | 1 | | No | |
| 5 | 1231250 | Vertical louver | 1 | | No | |
| 6 | 1231251 | Underneath support | 4 | | No | |
| 7 | 1301518 | Front cover plate | 1 | | No | |
| 8 | 1301517 | Back cover plate | 3 | | No | |
| 9 | 1301521 | Front partition plate | 3 | | No | |
| 10 | 1301526 | Support plate | 1 | | No | |
| 11 | 1742754 | Front partition plate pad | 4 | | No | |
| 12 | 3000167 | Fan motor | 1 | | No | |
| 13 | 3400191 | Thermostat | | | No | |
| 14 | 1301526 | Topcase(b) | | | No | |
| 15 | 1742954 | Front partition cushion(c) | | | No | |
| 16 | 1301530 | Back partition plate | | | No | |
| 17 | 2331064 | Centrifugal fan | | | No | |
| 18 | 1301530 | Rear partition plate | | | No | |
| 19 | 2331061 | Axial fan | | | Yes | |
| 20 | 21111240 | Suction pipe | | | No | |
| 21 | 21111236 | Discharge pipe | | | No | |
| 22 | 2500015 | 4-Valve way(h) | | | No | |
| 23 | 2000176 | Compressor(i) | | | No | |
| 24 | 1734937 | Cushion rubber | | | No | |
| 25 | 2331063 | Centrifugal fan assembly | | | No | |
| 26 | 1233252 | Scroll case | | | No | |
| 27 | 1301520 | Evaporator partition plate | | | No | |
| 28 | 0400122 | Evaporator assembly(j) | | | No | |
| 29 | 1742952 | Electric box cover plate pad | | | No | |
| 30 | 5701100 | Thermostat clip | | | Yes | |
| 31 | 0100812 | Bottom plate assembly | | | Yes | |
| 32 | 1231253 | Fresh air door | | | No | |
| 33 | 1303522 | Drawing pole | | | No | |
| 34 | 1236255 | Electric box cover plate | | | No | |
| 35 | 1231258 | Rotation handle | | | No | |
| 36 | 3000168 | Synchro motor(k) | | | No | |

| | | | | | | |
|---|---|---|---|---|---|---|
| 37 | 3600218 | motor capacito (I) | | | Yes | |
| 38 | 3400198 | Select switch(m) | | | No | |
| 39 | 1301935 | Electric box(N) | | | No | |
| 40 | 400011 | Line contact bank | | | No | |
| 41 | 3400198 | Selection switch | | | No | |
| 42 | 1300760 | Control panel(0) | | | No | |
| 43 | 1431075 | Knob | | | Yes | |
| 44 | 3400008 | Ship sized switch | | | Yes | |
| 45 | 1300760 | Control panel(0) | | | No | |
| 46 | 3400191 | Thermostat(p) | | | Yes | |
| 47 | 3600131 | Compressor capacitor | | | Yes | |
| 48 | 5701099 | Capacitor clip | | | No | |
| 49 | 1301632 | Fixed band | | | No | |
| 50 | 1233254 | Drain pan | | | No | |
| 51 | 0400180 | Condenser assembly(q) | | | No | |
| 52 | 0100396 | Casing assembly | | | No | |
| 53 | | | | | | |
| 54 | | | | | | |

Model:HW-18CC03,EA-1990W

| NO. | Special NO. | Name | Quantity | description | Damageable parts(yes or no) | Cost price |
|---|---|---|---|---|---|---|
| 1 | 1231245 | Air-inlet bar(A) | | | No | |
| 2 | 2400105 | Filter (B) | | | No | |
| 3 | 1231246 | Font panel(C) | | | No | |
| 4 | 1231251 | Underneath support | | | No | |
| 5 | 1231250 | Vertical louver | | | No | |
| 6 | 1231249 | Immobility box | | | No | |
| 7 | 1734960 | Pad | | | No | |

Model:HW-18CC03,EA-1990W

| NO. | Special NO. | Name | Quantity | description | Damageable parts(yes or no) | Cost price |
|---|---|---|---|---|---|---|
| 1 | 1231245 | Air-inlet bar(A) | | | No | |
| 2 | 2400105 | Filter (B) | | | No | |
| 3 | 1231246 | Font panel(C) | | | No | |
| 4 | 1231251 | Underneath support | | | No | |
| 5 | 1231250 | Vertical louver | | | No | |
| 6 | 1231249 | Immobility box | | | No | |
| 7 | 1734960 | Pad | | | No | |
| 8 | 1231247 | Horizontal louver | | | No | |
| 9 | 1231248 | Synchronous pole | | | No | |
| 10 | 1231248 | Synchronous pole | | | No | |
| 11 | 1301518 | Front cover plate | | | No | |
| 12 | 1301517 | Back cover plate | | | No | |
| 13 | 1301521 | Front partition plate | | | No | |
| 14 | 1301526 | Support plate | | | No | |
| 15 | 1742754 | Front partition plate | | | No | |
| 16 | 3000167 | Fan motor | | | No | |
| 17 | 0500391 | Liquid-divide pipe | | | No | |
| 18 | 1301530 | Back partition plate | | | No | |
| 19 | 2331061 | Centrifugal fan | | | No | |
| 20 | 0500424 | Suction pipe | | | No | |
| 21 | 1431783 | Wire holder cover | | | No | |
| 22 | 2000113 | Compressor | | | No | |
| 23 | 1751965 | Cushion rubber | | | No | |
| 24 | 1751965 | Cushion robber of compressor | | | No | |
| 25 | 2332063 | Centrifugal fan | | | No | |
| 26 | 1233252 | Scroll case | | | No | |
| 27 | 1301520 | Evaporator | | | No | |
| 28 | 0400122 | Evaporator | | | No | |
| 29 | 1742952 | Electric box cover | | | No | |
| 30 | 5701100 | Thermostat clip | | | No | |
| 31 | 1301524 | Bottom plate | | | No | |
| 32 | 1231253 | Fresh air door | | | No | |
| 33 | 1303522 | Place button | | | No | |
| 34 | 1236255 | Electric box cover | | | No | |
| 35 | 1231258 | Rotation handle | | | No | |
| 36 | 3000168 | Synchro motor | | | Yes | |
| 37 | 4200117 | Power cord | | | No | |
| 38 | 3600218 | Fan motor capacitor | | | No | |
| 39 | 3400145 | Base line bank | | | No | |
| 40 | 1301528 | Electric box | | | No | |
| 41 | 4000011 | Line contact bank | | | No | |
| 42 | 5736092 | Power cord clip | | | No | |
| 43 | 1324670 | Control panel | | | No | |
| 44 | 1231256 | Knob | | | No | |
| 45 | 1301527 | Switch | | | No | |
| 46 | 1231256 | Knob | | | No | |

| | | | | | | |
|---|---|---|---|---|---|---|
| 47 | 1431781 | Dial knob | | | No | |
| 48 | 3400144 | Thermostat | | | Yes | |
| 49 | 3600010 | Compressor | | | Yes | |
| 50 | 5701003 | Capacitor clip | | | No | |
| 51 | 1301632 | Fixing board | | | No | |
| 52 | 340144 | Thermostat | | | No | |
| 53 | 1233254 | Drain pan | | | No | |
| 54 | 0100396 | Casing assembly | | | No | |
| 55 | 0400123 | Condenser assembly | | | Yes | |
| 56 | | | | | No | |
| 57 | | | | | No | |

Knock-down Drawings Description List
HW-18CA13

| NO | Special NO. | Name | Quantity | description | Damageable parts(yes or no) | Cost price |
|---|---|---|---|---|---|---|
| 1 | 2400062 | Filter | | | No | |
| 2 | 1431395 | Font panel | | | No | |
| 3 | 0400092 | Evaporator assembly | | | No | |
| 4 | 1733562 | Font panel foam | | | No | |
| 5 | | | | | No | |
| 6 | 1101116 | Evaporator partition plate | | | No | |
| 7 | 1233105 | Drain pan | | | No | |
| 8 | 1101120 | Bottom plate | | | No | |
| 9 | 1431075 | Knob | | | No | |
| 10 | 1311478 | Control panel | | | No | |
| 11 | 1301425 | Electric box | | | No | |
| 12 | —— | Power cord | | | No | |
| 13 | 4000082 | Line contact bank | | | No | |
| 14 | 3400096 | Thermostat | | | Yes | |
| 15 | 3600018 | Fan motor capacitor | | | Yes | |
| 16 | 3600030 | Compressor capacitor | | | Yes | |
| 17 | 1301430 | Electric box cover plate | | | No | |
| 18 | 0400091 | Condenser assembly | | | No | |
| 19 | 1431388 | Plate for Leader orientation | | | No | |
| 20 | 1431387 | leader | | | No | |
| 21 | 1431392 | Synchro motor box | | | No | |
| 22 | 0100364 | Casing assembly | | | No | |
| 23 | 3000104 | Synchro motor | | | Yes | |
| 24 | 2331033 | Centrifugal fan assembly | | | Yes | |
| 25 | | | | | | |
| 26 | | | | | | |
| 27 | 1433393 | Scroll case | | | No | |
| 28 | 1231190 | Thermostat clip | | | No | |
| 29 | 3000215 | Fan motor | | | Yes | |
| 30 | 1101114 | motor support | | | No | |
| 31 | 1301426 | cover plate | | | No | |
| 32 | 1101115 | Front partition plate | | | No | |
| 33 | 2331032 | Axial fan | | | Yes | |
| 34 | 1101113 | Back partition plate | | | No | |
| 35 | 2000084 | Compressor | | | Yes | |

| | | | | | | |
|---|---|---|---|---|---|---|
| 36 | 1756819 | latex | | | No | |
| 37 | | | | | | |
| 38 | | | | | | |
| 39 | | | | | | |
| 40 | | | | | | |

HW-24C03

| NO. | Special NO. | Name | Quantity | description | Damageable parts(yes or no) | Cost price |
|---|---|---|---|---|---|---|
| 1 | | Front grill assembly | | | No | |
| 2 | 1232119 | Front panel | | | No | |
| 3 | 0900078 | Air purifying filter | | | No | |
| 4 | 2400076 | Air filter | | | No | |
| 5 | 5002013 | Screw | | | No | |
| 6 | 0400065 | Heat exchanger | | | No | |
| 7 | 2343037 | Bearing | | | No | |
| 8 | 2300034 | Fan | | | Yes | |
| 9 | 5002021 | Screw | | | No | |
| 10 | 1232116 | Bottom frame | | | No | |
| 11 | 1734630 | Pad | | | No | |
| 12 | 1733639 | Pad | | | No | |
| 13 | 1734627 | Pad | | | No | |
| 14 | 1101075 | Mounting plate | | | No | |
| 15 | 3000050 | Fan motor | | | Yes | |
| 16 | 1431458 | Motor cover | | | No | |
| 17 | 5002114 | Screw | | | No | |
| 18 | 4000108 | Terminal block | | | No | |
| 19 | 1231123 | Electric box | | | No | |
| 20 | ---------- | Power wire | | | No | |
| 21 | 5002116 | Screw | | | No | |
| 22 | 1231124 | Wiring clamp | | | No | |
| 23 | 3900004 | Temperature sensor | | | Yes | |
| 24 | 5002070 | Screw | | | No | |
| 25 | 5002026 | Screw | | | No | |
| 26 | 3000071 | Swing motor | | | Yes | |
| 27 | 5002030 | Screw | | | No | |
| 28 | 1231126 | Horizontal blade | | | No | |
| 29 | 1734635 | Pad | | | No | |
| 30 | 1231115 | Drain pan | | | No | |
| 31 | 0900049 | Drain hose | | | No | |
| 32 | 1733647 | Heat insulation pad | | | No | |
| 33 | 1733632 | Heat insulation pad | | | No | |
| 34 | 1443459 | Panel button | | | No | |
| 35 | 5313001 | Nut | | | No | |
| 36 | 2912002 | Dustproof cover | | | No | |
| 37 | 5313003 | Nut | | | No | |
| 38 | 2912002 | Dustproof cover | | | No | |
| 39 | 0500225 | Liquid pipe assembly | | | No | |
| 40 | 0500226 | Gas pipe assembly | | | No | |
| 41 | 1734631A | Protective tube | | | No | |
| 42 | 1231125 | Service cover | | | No | |
| 43 | 0600252 | PC board | | | No | |
| 44 | 200185 | compressor | | | Yes | |
| 45 | 17521174 | Cushion of compressor | | | No | |
| 46 | 5701122 | Fasten clip of compressor | | | No | |
| 47 | 13011266 | fixer | | | No | |
| 48 | 1301702 | Bottom plate | | | No | |
| 49 | 21111108 | Liquid container | | | No | |
| 50 | 2611312 | Capillary | | | No | |
| 51 | 1756030 | Lining pipe | | | No | |
| 52 | 0500446 | Liquid inlet pipe of evaporator | | | No | |
| 53 | 1233323 | Water receiving plate | | | No | |
| 54 | 1301528 | Electric box | | | No | |
| 55 | 3600239 | Compressor starting capacitor | | | Yes | |
| 56 | 3600021 | Compressor running capacitor | | | Yes | |

| | | | | | | |
|---|---|---|---|---|---|---|
| 57 | 5701003 | Capacitor clip | | | No | |
| 58 | 3000168 | Synchre motor | | | Yes | |
| 59 | 3600134 | Fan capacitor | | | Yes | |
| 60 | 3100121 | Compressor relay | | | No | |
| 61 | 3400145 | Selection switch | | | Yes | |
| 62 | 1436772 | Line fixed clip | | | No | |
| 63 | 5002098 | Bolt | | | No | |
| 64 | 4200169 | Wire | | | No | |

# 6.MOCROCOMPUTER CONTROLING

## a. Part's name and function of MOCROCOMPUTER

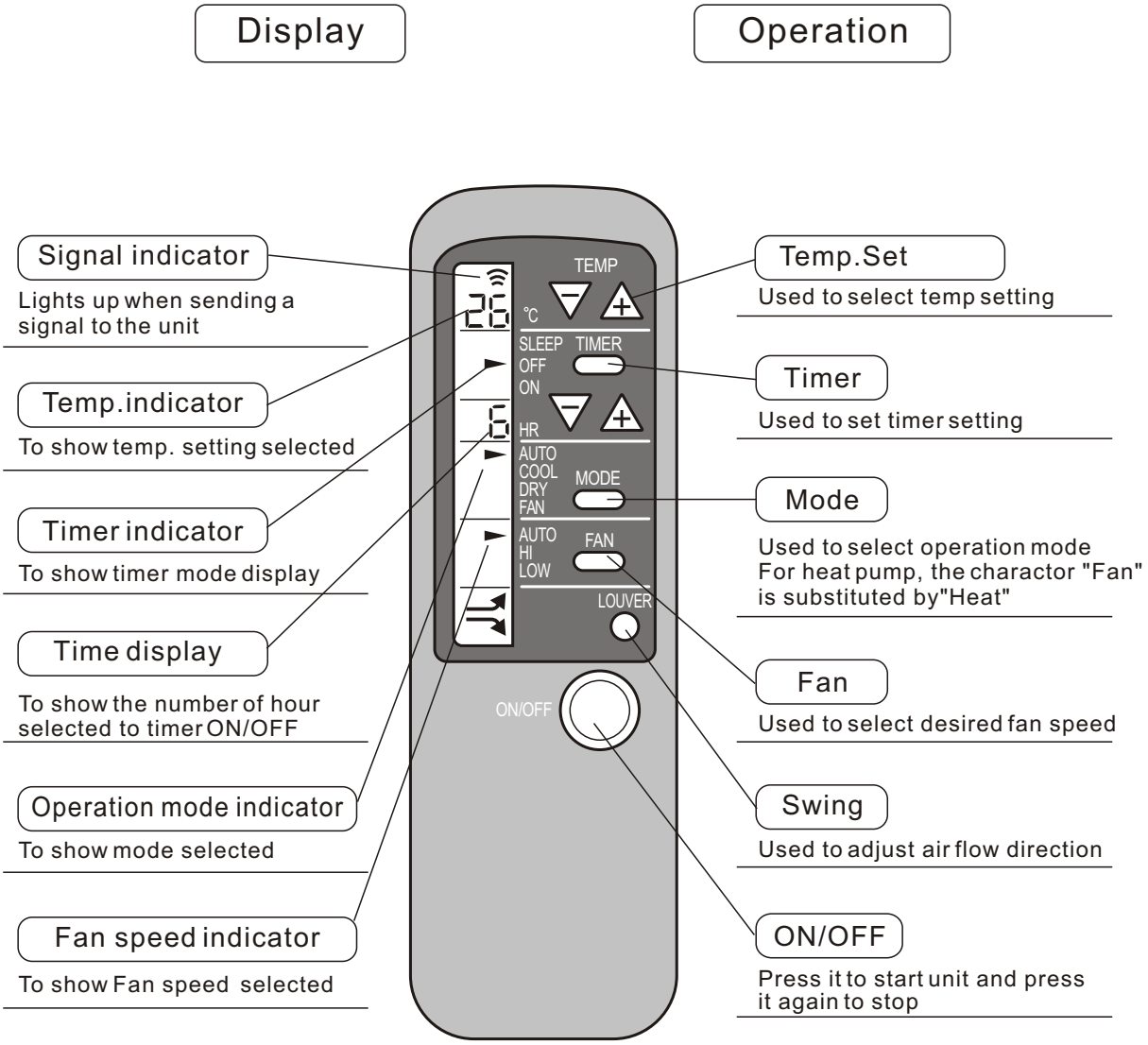


For cooling only type

## Parts and Functions

### Inserting Dry Batteries

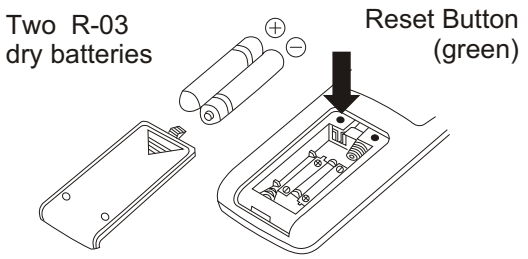


Note:
1) Use two new dry batteries of the same brand and type.
2) When the remote controller is not active after dry batteries have been replaced, press with a thin stick the green-colored reset button which is illustrated with a ↓ mark in the figure.
3) If the wireless remote controller is not to be used for a long period, the dry batteries should be removed from the wireless remote controller.

**1 Remove the lid**

Gently press the part indicated by OPEN and slide the lid away from the controller.

**2 Insert the dry batteries**

Make sure the dry batteries are set in the right directions according to the diagram in the cavity.

**3 Attach the lid**

**4 Verify by the indicators**

If displays do not appear when the ON/OFF switch has been pressed, set dry batteries once more.

### Handing the Wireless Remote Controller

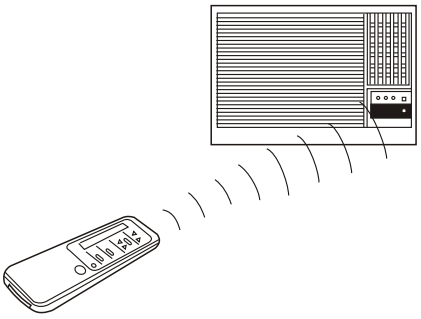

- When operating, point the signal sending head toward the signal receiver of the unit.
- Do not allow any obstacle between the signal sending head and the signal receiver.
- Do not drop, throw or wet the wireless remote controller.
- The signal receiver may not receive the signal in a room which has an electro-lighting (rapidstart) type fluorescent lamp, an inverter-type fluorescent lamp or a cordless phone.

## b MODE OPERATION

1.Start
Press ON/OFF button

2.Select operation mode
Press the "MODE" button. Every time the button is pressed, operation mode changes in the following order.

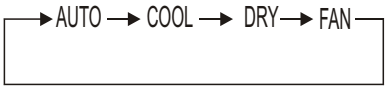


Select "Auto" mode.

3.Fan speed selection
Press the FAN speed button. Every time it is pressed, Fan speed changes as follows:

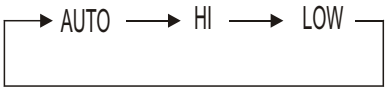


Select desired fan speed. Change air flow if necessary.

4.Stop
Press ON/OFF button again.

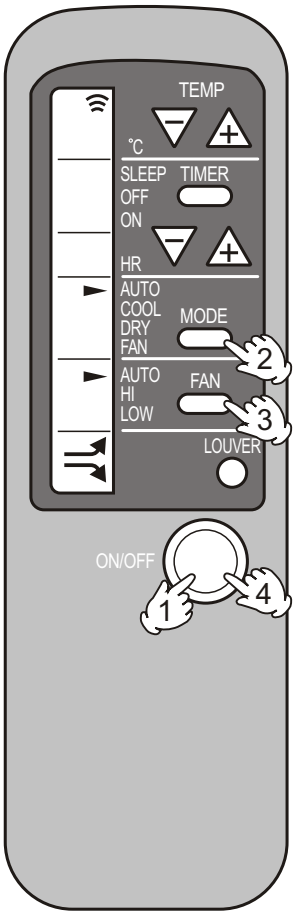


**Hints**

In Auto mode, the unit will select operation mode automatically according to room temp.

## Cooling operation

1.Start
Press ON/OFF button

2.Select operation mode
Press the "MODE" button. Every time the button is pressed, operation mode changes in the following order.

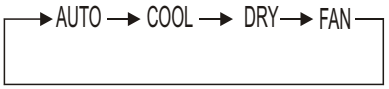


Select "cool" mode.

3.Select temp. setting
Select desired temp., Mby using "TEMP." button.
" ⊕ " Each press will increase temp. setting by 1℃.
" ⊖ " Each press will decrease temp. setting by 1℃.
If the button is kept pressed, temp. setting will change quickly to your desired figure.

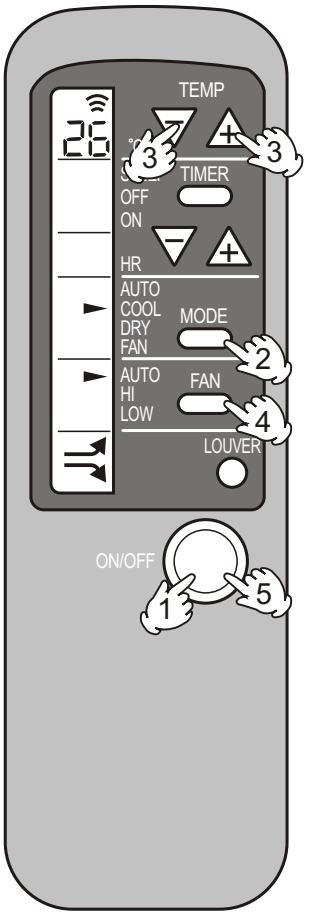


4.Fan speed selection
Press the "Fan" button, every time it is pressed, fan speed changes as follows:

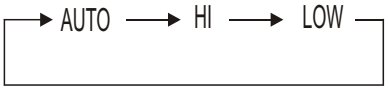


Select desired setting.
Change air flow direction if necessary.

5.Stop
Press ON/OFF button again.

**Cautions:**

To-protect unit system, don't restart until 3 minutes have elapsed.
If the unit has been running under large humidity for a long time, dew might occur at outlet grating.

# Dry Mode

1.Start
Press ON/OFF button

2.Select operation mode
Press the "MODE" button. Every time the button is pressed, operation mode changes in the following order.

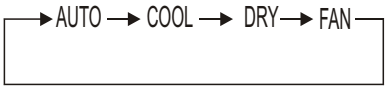


Select "DRY" mode.

Change air flow direction if necessary.

3.Stop
Press"ON/OFF" button again.

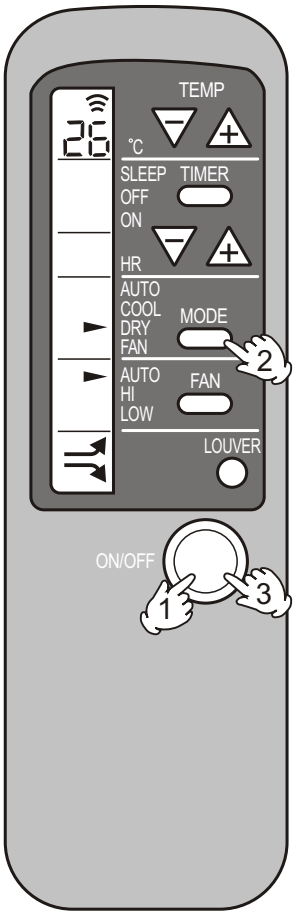


**Cautions:**

Unit will run intermittently in Dry mode with fan speed at "LOW", regardless of its setting.
Air blown out will be very cold at relatively low room temp.

# Fan operation

1.Start
Press ON/OFF button

2.Select operation mode
Press the "MODE" button. Every time the button is pressed, operation mode changes in the following order:

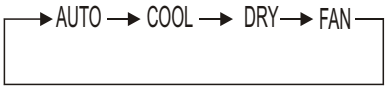


Select "Fan" mode.
This "Fan" is substituted by "HEAT" for heat type air conditioner.

3.Fan speed selection
Press the FAN speed button. Every time it is pressed, Fan speed changes as follows:

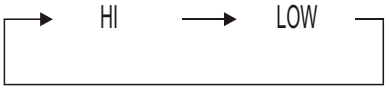


Select desired fan speed. Change air flow if necessary.

4.Stop
Press ON/OFF button again.

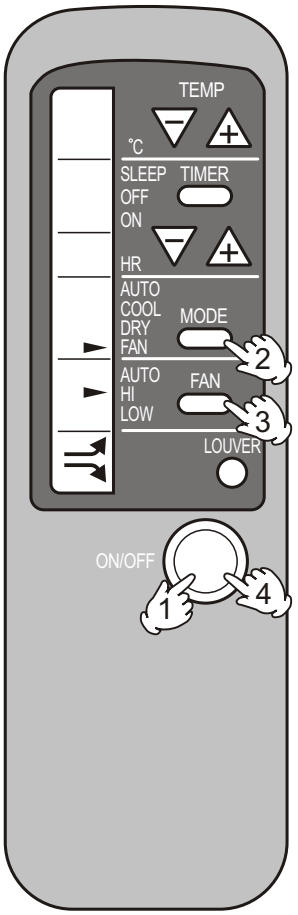


**Hints**

Compressor won't start in FAN mode, only fan motor will run at selected speed.

# Heat operation

This function is only for heat pump.

1.Start
Press ON/OFF button

2.Select operation mode
Press the "MODE" button. Every time the button is pressed, operation mode changes in the following order.

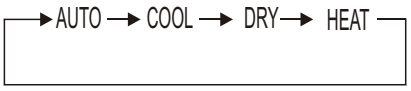


Select "Heat" mode.

3.Fan speed selection
Press the FAN speed button. Every time it is pressed, Fan speed changes as follows:

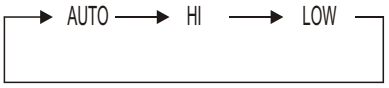


Select desired fan speed. Change air flow if necessary.

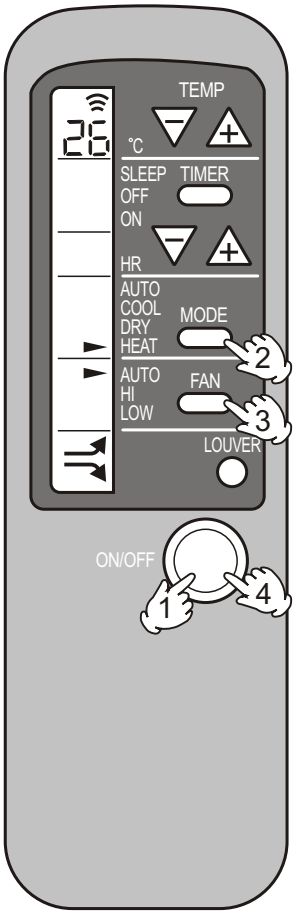


For heat pump type

4.Stop
Press ON/OFF button again.

※Note: This Auxiliary heat function is only for AW-12eA03, AW-12eA04

Auxiliary Heat function
In Heating, if push Auxiliary Heat switch to ON position, when room temperature is no more than 20℃, after compressor has started for 1 minute, Auxiliary Heat function starts; when room temperature is over 25℃ or during defrosting, Auxiliary Heat function stops. To cancel Auxiliary heat function, just push to "OFF" position.

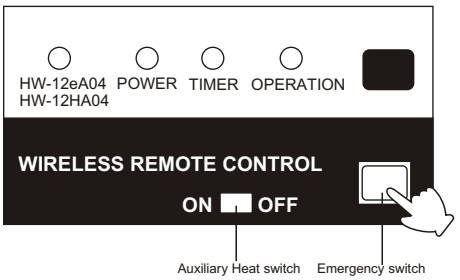

## Sleep mode setting

1.Start unit and confirm its operation mode.
In dry and fan mode, there is no sleep function.

2.Select SLEEP function
Press the "TIMER" button, Every time the button is pressed; it changes in the following order:

→ SLEEP → TIMER OFF → TIMER ON → BLANK

Select"SLEEP" function.
More details is illustrated in page 13.

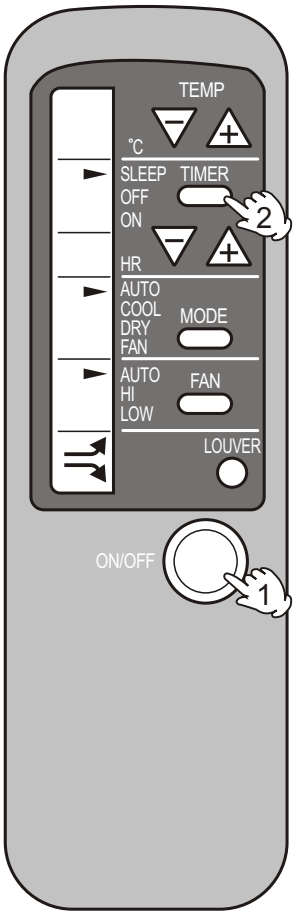


**Hint**

In Sleep function, temp. setting will rise automatically by 1℃ after one hour's cooling operation. One hour later, it will rise by another 1℃ and maintain at this temp. until the unit runs for approx. 6 hours.

# Timer operation

With this function, unit will start or stop at the time you want.

1.Start unit and confirm its operation mode. If it's not started, start it and select desired operation mode.

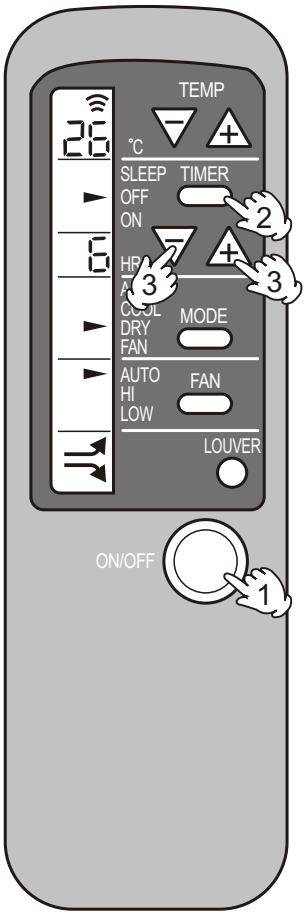


2. Select Timer function
Press the "TIMER" button. Every time the button is pressed; it changes in the following order:

→ SLEEP → TIMER OFF → TIMER ON → BLANK

Select desired mode. (TIMER OFF or TIMER ON)

3.Select time
Press TIME SET button.
" ⊕ " Each press will increase time setting by 1 hour.
" ⊖ " Each press will decrease time setting by 1 hour.
If the button is kept pressed, time setting will change quickly to your desired figure.
Time setting is available within 1-12 Hrs.
Time displayed shows how many hours later unit will start or stop.

To cancel Timer function
Select "Blank" by pressing TIMER button.

**Caution**

TIMER function is not available in SLEEP mode.

## Sleep

When the sleep and timing are set simultaneously, the sleep is prior. The sleep will automatically reset the timing, and cancel the former timing. The setting of time is as below:

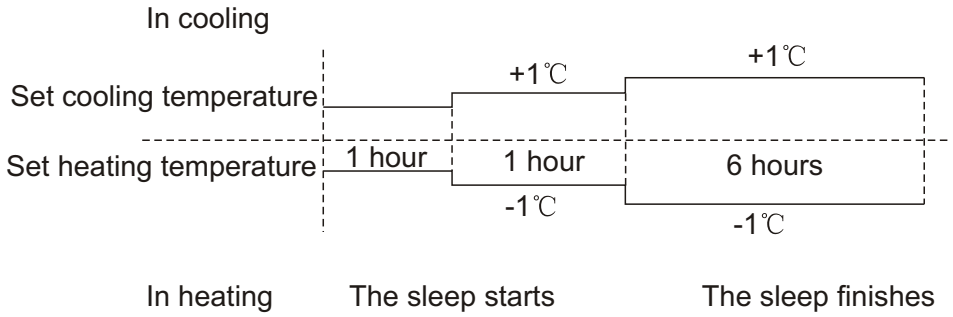


In sleep running, the air velocity can be adjusted. After the sleep finishes, the air conditioner will resume its former mode automatically.

## Adjusting of the air direction

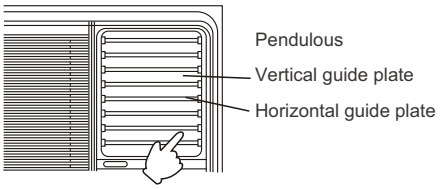


Left/right adjusting

Put the "Louver" button on the remote controller, the pendulous guide plate automatically adjusts the left/right air direction. Push again, the plate will stop at its present position.

Upward/ downward adjusting

Turn the horizontal guide plate gently to adjust the upward/downward air direction. (As per the above picture).

## Emergency running

If the remote controller is lost or damaged, you can use the Emergency running. Open the small door of the display board, push down the "Emergency switch" key. The "Operation" light is on and the conditioner will perform automatic running, The emergency running disables setting of temperature, air speed, sleep and timer, etc.

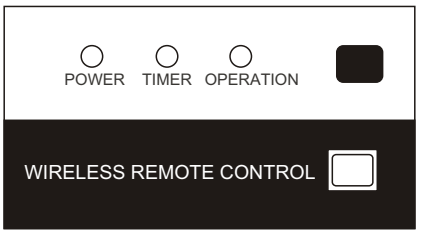

3 minutes delay function

After the conditioner is switched off, the protection device will make the compressor perform 3 minutes delay before switching on the machine.

Cold air preventing

In heating, to prevent the blowing of cold air, the fan will pause for a while after the unit starting. then begins to blow out warm air.

Auto frost-removing function

In heating when the outdoor heat exchanger gets frost, the machine will defrost automatically. and the fan will stop. After that the machine will resume running automatically.

Ventilating function (For AW-12XXX, AW-18HBO3)

There's a handle at the lower left corner of the air outlet grating, which is the ventilating switch. Generally it is set to left "Close" position. When moved to right, it will discharge part of the indoor foul air so as to keep the indoor air fresh. If the switch is set to right "Open" position for a long period, it will influence the cooling effect.

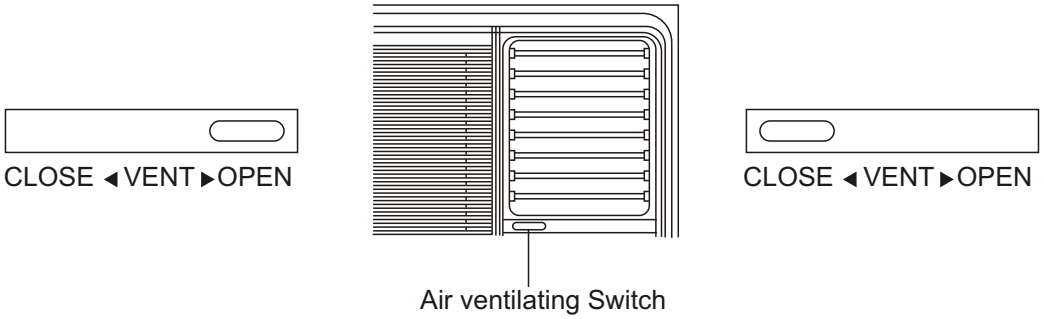

# 7.THE FUNCTION OF ELECTRIC CONTROL INTROUNTION

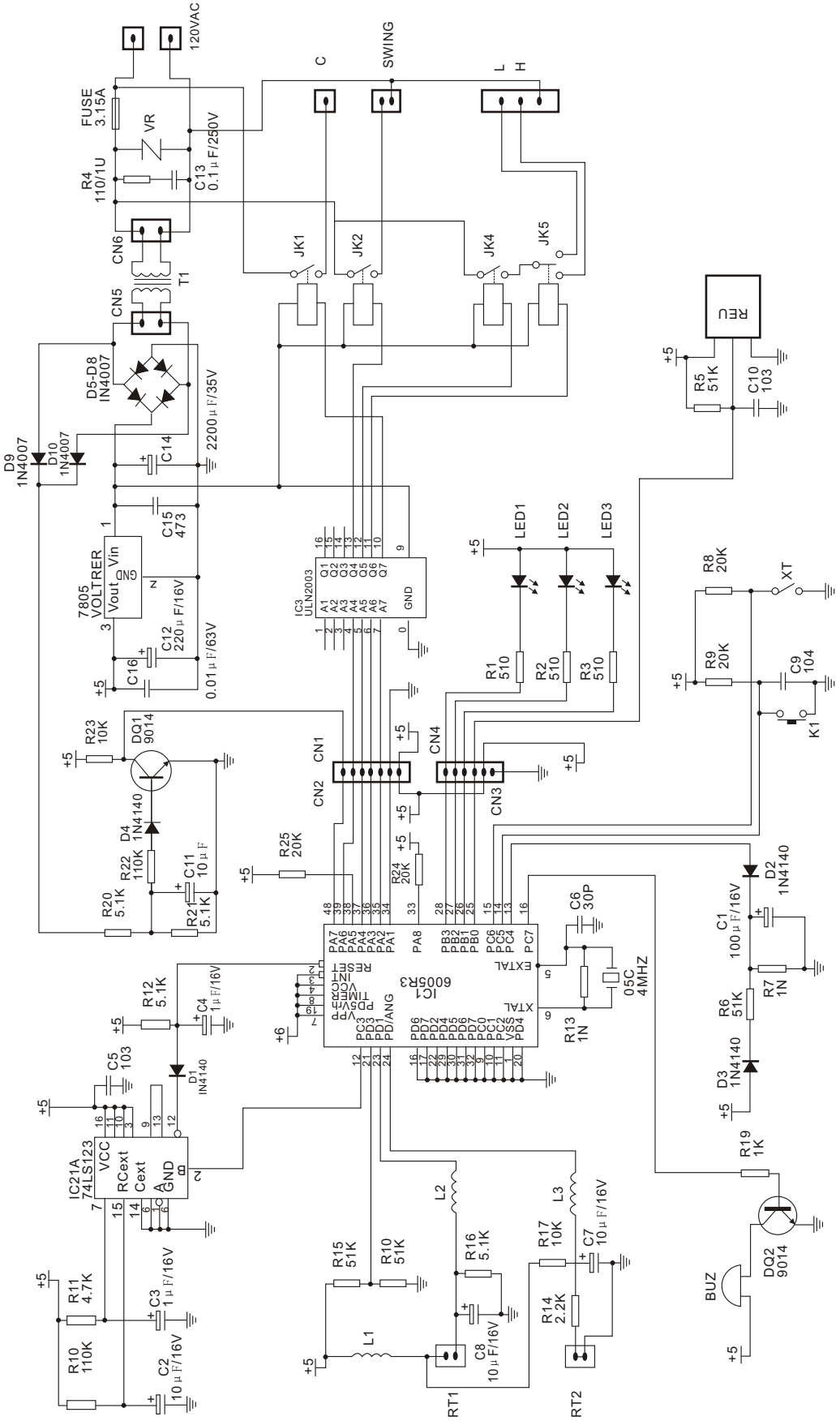

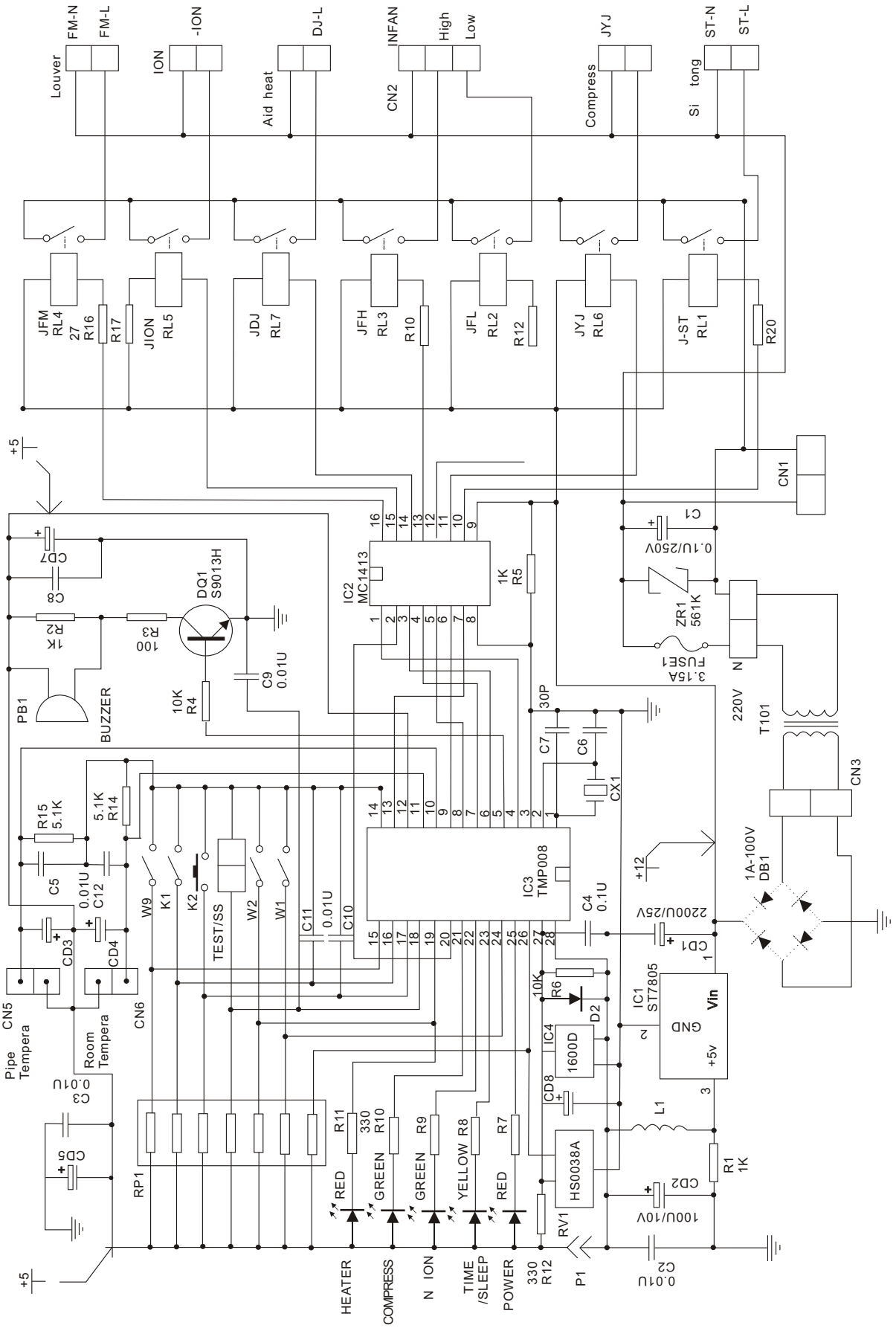
FM-N
FM-L
Louver
ION
-ION
Aid heat
DJ-L
INFAN
High
Low
CN2
JYJ
Compress
ST-N
ST-L
Si tong
JFM RL4
27 R16
R17
JION RL5
JDJ RL7
JFH RL3
R10
JFL RL2
R12
JYJ RL6
J-ST RL1
R20
+5
CN1
C1
0.1U/250V
ZR1 561K
FUSE1 3.15A
N
220V
T101
CN3
1A-100V DB1
CD7
C8
DQ1 S9013H
R2 1K
R3 100
PB1
BUZZER
10K R4
C9 0.01U
IC2 MC1413
1K R5
30P
C7
C6
CX1
R15 5.1K
5.1K R14
C5
0.01U C12
CD3
CD4
W9
K1
K2
TEST/SS
W2
W1
C11
0.01U C10
IC3 TMP008
C4 0.1U
+12
2200U/25V
CD1
IC1 ST7805
Vin
GND
+5v
10K R6
D2
IC4 1600D
CD8
L1
R1 1K
CD2
100U/10V
C2 0.01U
CN5
Pipe Tempera
Room Tempera
CN6
C3 0.01U
CD5
RP1
R11 330
R10
R9
R8
R7
RED
GREEN
GREEN
YELLOW
RED
HS0038A
RV1
330 R12
P1
HEATER
COMPRESS
N ION
TIME /SLEEP
POWER

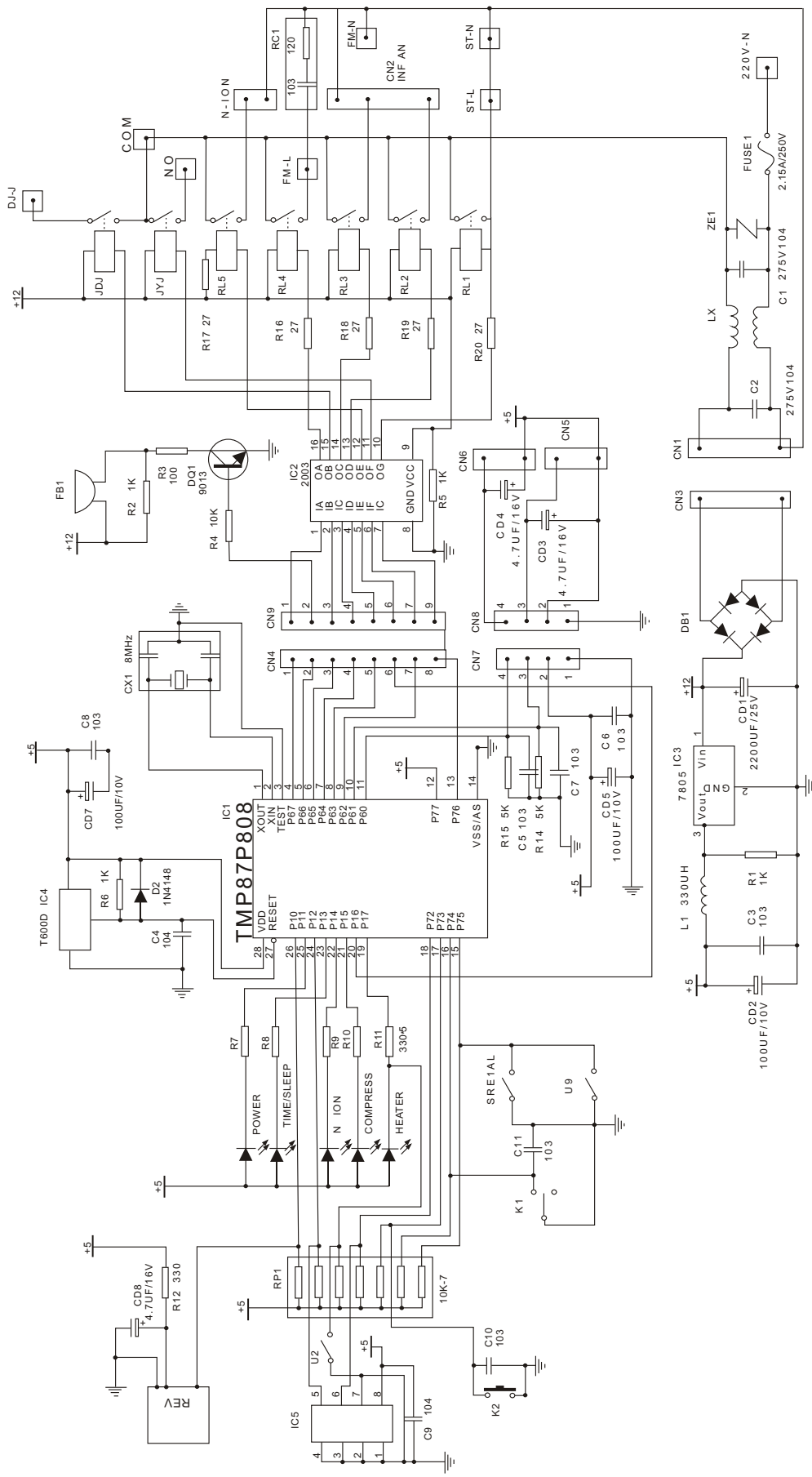
TMP87P808
IC1
IC2 2003
IC3 7805
IC4 T600D
IC5
DJ-J
COM
NO
N-ION
RC1 120
103
FM-N
FM-L
CN2 INFAN
ST-N
ST-L
220V-N
FUSE1 2.15A/250V
ZE1
C1 275V104
LX
C2 275V104
CN1
CN3
DB1
CD1 2200UF/25V
CD2 100UF/10V
L1 330UH
R1 1K
C3 103
JDJ
JYJ
RL5
RL4
RL3
RL2
RL1
R17 27
R16 27
R18 27
R19 27
R20 27
FB1
R2 1K
R3 100
DQ1 9013
R4 10K
R5 1K
CN5
CN6
CD4 4.7UF/16V
CD3 4.7UF/16V
CN8
CN9
CN4
CN7
CX1 8MHz
C8 103
CD7 100UF/10V
R6 1K
D2 1N4148
C4 104
C6 103
C7 103
CD5 100UF/10V
R15 5K
C5 103
R14 5K
R7
R8
R9
R10
R11 330-6
POWER
TIME/SLEEP
N ION
COMPRESS
HEATER
SRE1AL
U9
C11 103
K1
RP1 10K-7
CD8 4.7UF/16V
R12 330
REV
U2
C10 103
K2
C9 104
+5
+12

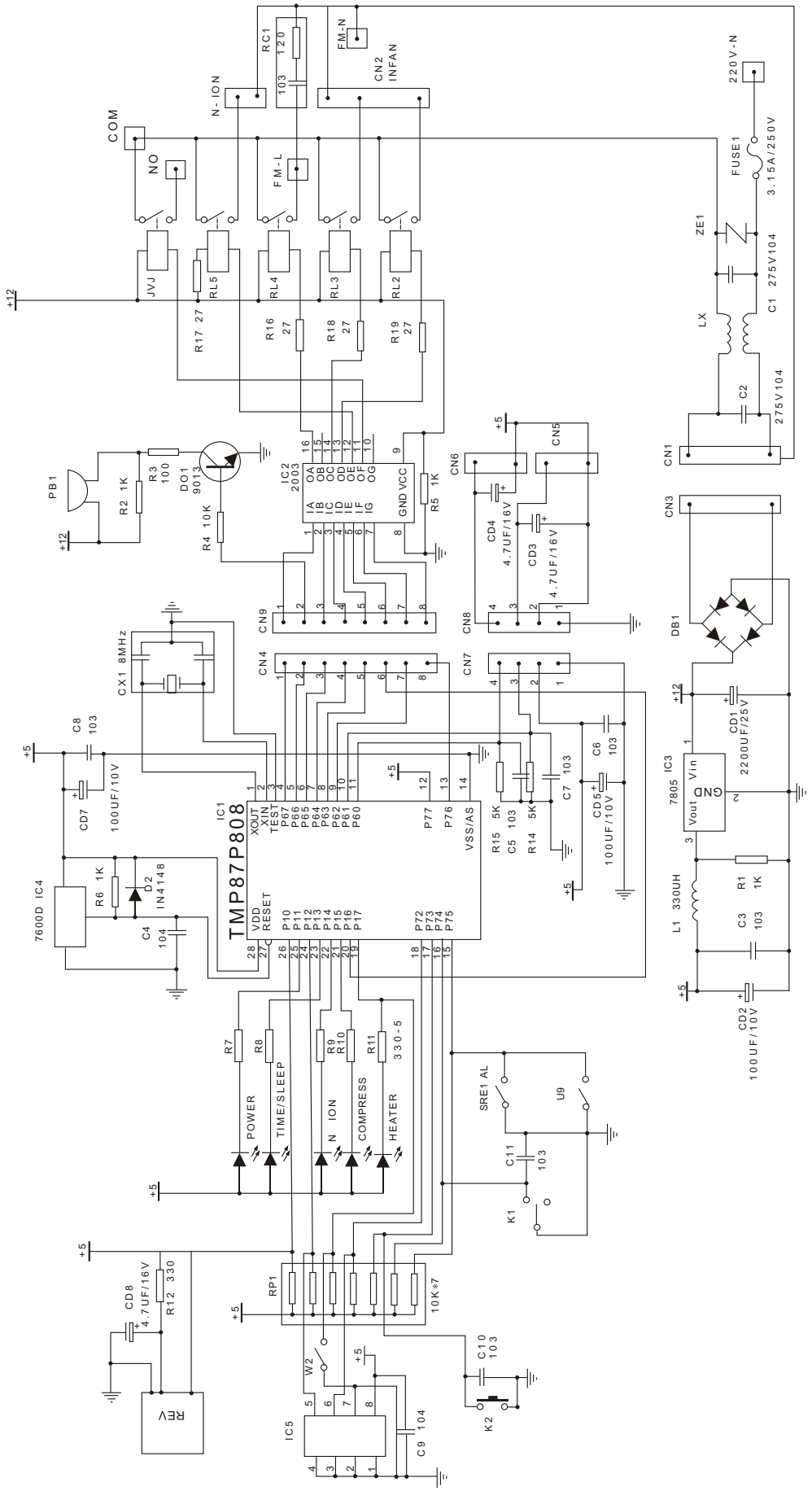
COM
NO
N-ION
RC1
120
103
FM-N
CN2
INFAN
220V-N
FUSE1
3.15A/250V
ZE1
C1 275V104
LX
C2
275V104
CN1
JVJ
RL5
RL4
RL3
RL2
+12
R17 27
R16 27
R18 27
R19 27
PB1
R2 1K
R3 100
DO1 9013
R4 10K
IC2 2003
GND VCC
R5 1K
CN6
CN5
CD4 4.7UF/16V
CD3 4.7UF/16V
CN9
CN8
CN3
DB1
CX1 8MHz
CN4
CN7
CD1 2200UF/25V
C8 103
CD7 100UF/10V
IC1
TMP87P808
XOUT
XIN
TEST
VDD
RESET
VSS/AS
C6 103
CD5 100UF/10V
R15 5K
C5 103
R14 5K
C7 103
7805 IC3
Vout Vin
GND
7600D IC4
R6 1K
D2 IN4148
C4 104
L1 330UH
R1 1K
C3 103
CD2 100UF/10V
R7
R8
R9
R10
R11 330-5
POWER
TIME/SLEEP
N ION
COMPRESS
HEATER
SRE1 AL
U9
C11 103
K1
CD8 4.7UF/16V
R12 330
RP1
10K*7
W2
C10 103
K2
REV
IC5
C9 104

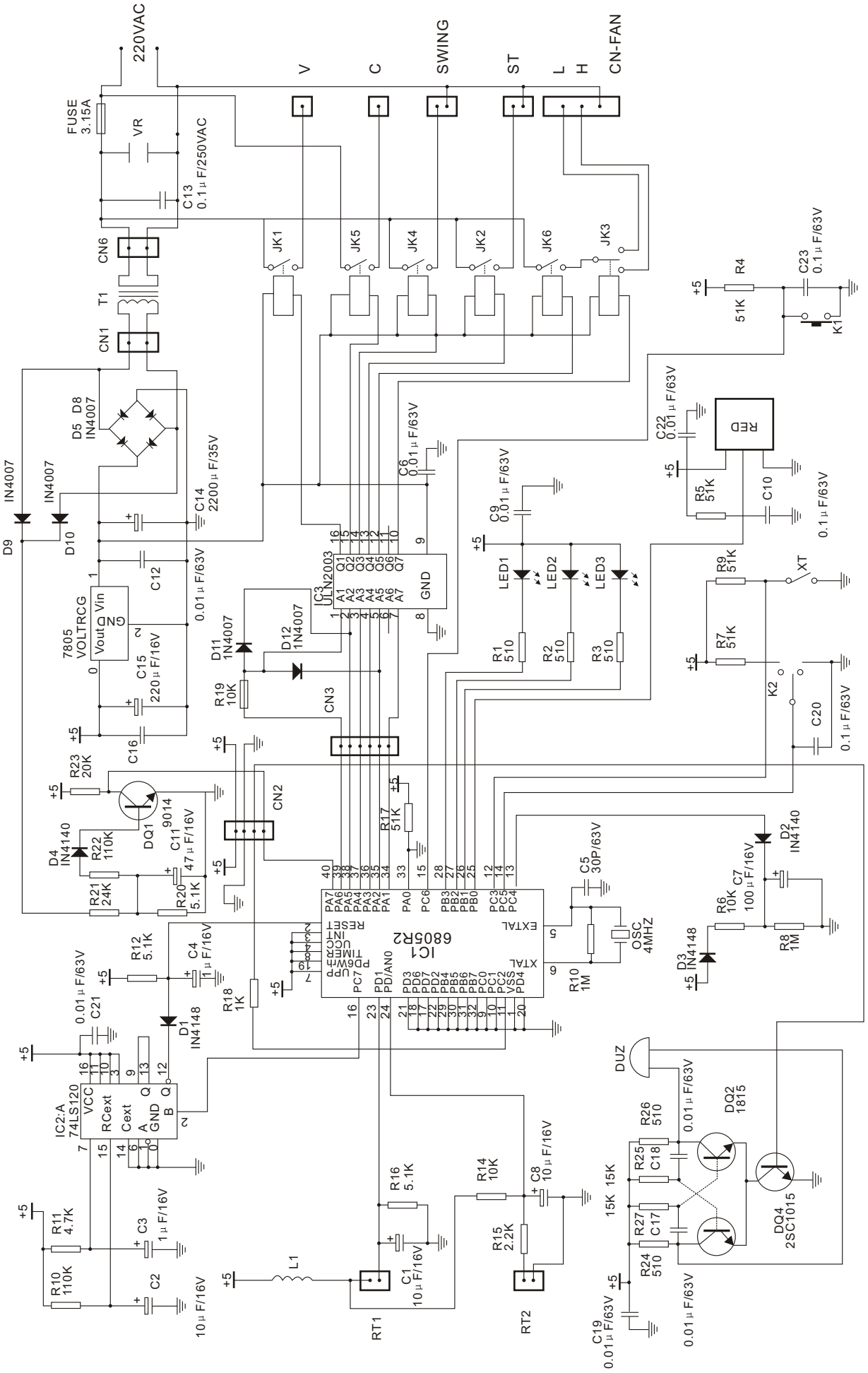
220VAC
FUSE 3.15A
VR
C13 0.1μF/250VAC
CN6
T1
CN1
D5 D8 IN4007
D9 IN4007
D10 IN4007
C14 2200μF/35V
7805 VOLTRCG
Vout Vin GND
C12 0.01μF/63V
C15 220μF/16V
C16
R23 20K
DQ1 9014
D4 IN4140
R22 110K
C11 47μF/16V
R21 24K
R20 5.1K
R12 5.1K
C4 1μF/16V
C21 0.01μF/63V
D1 IN4148
IC2:A 74LS120
VCC RCext Cext A GND B Q Q
R11 4.7K
C3 1μF/16V
R10 110K
C2 10μF/16V
L1
RT1
C1 10μF/16V
R16 5.1K
R18 1K
R14 10K
C8 10μF/16V
R15 2.2K
RT2
IC1 68052
PA7 PA6 PA5 PA4 PA3 PA2 PA1 PA0 PC6 PB3 PB2 PB1 PB0 PC3 PC5 PC4
RESET INT UCC TIMER PD6WR UPP PC7 PD1 PD/AN0 EXTAL XTAL
PD3 PD6 PD7 PD2 PB4 PB5 PB6 PB7 PC0 PC1 PC2 VSS PD4
R17 51K
C5 30P/63V
OSC 4MHZ
R10 1M
D2 IN4140
R6 10K
C7 100μF/16V
R8 1M
D3 IN4148
DUZ
R26 510
R25 C18
R27 C17
R24 510
15K 15K
DQ2 1815
DQ4 2SC1015
C19 0.01μF/63V
0.01μF/63V
CN3
CN2
IC3 ULN2003
A1 A2 A3 A4 A5 A6 A7 GND
Q1 Q2 Q3 Q4 Q5 Q6 Q7
C6 0.01μF/63V
D11 1N4007
D12 1N4007
R19 10K
C9 0.01μF/63V
LED1 LED2 LED3
R1 510
R2 510
R3 510
REF
C22 0.01μF/63V
R5 51K
C10 0.1μF/63V
R9 51K
XT
R7 51K
K2
C20 0.1μF/63V
R4 51K
C23 0.1μF/63V
K1
JK1 JK5 JK4 JK2 JK6 JK3
V C SWING ST L H CN-FAN

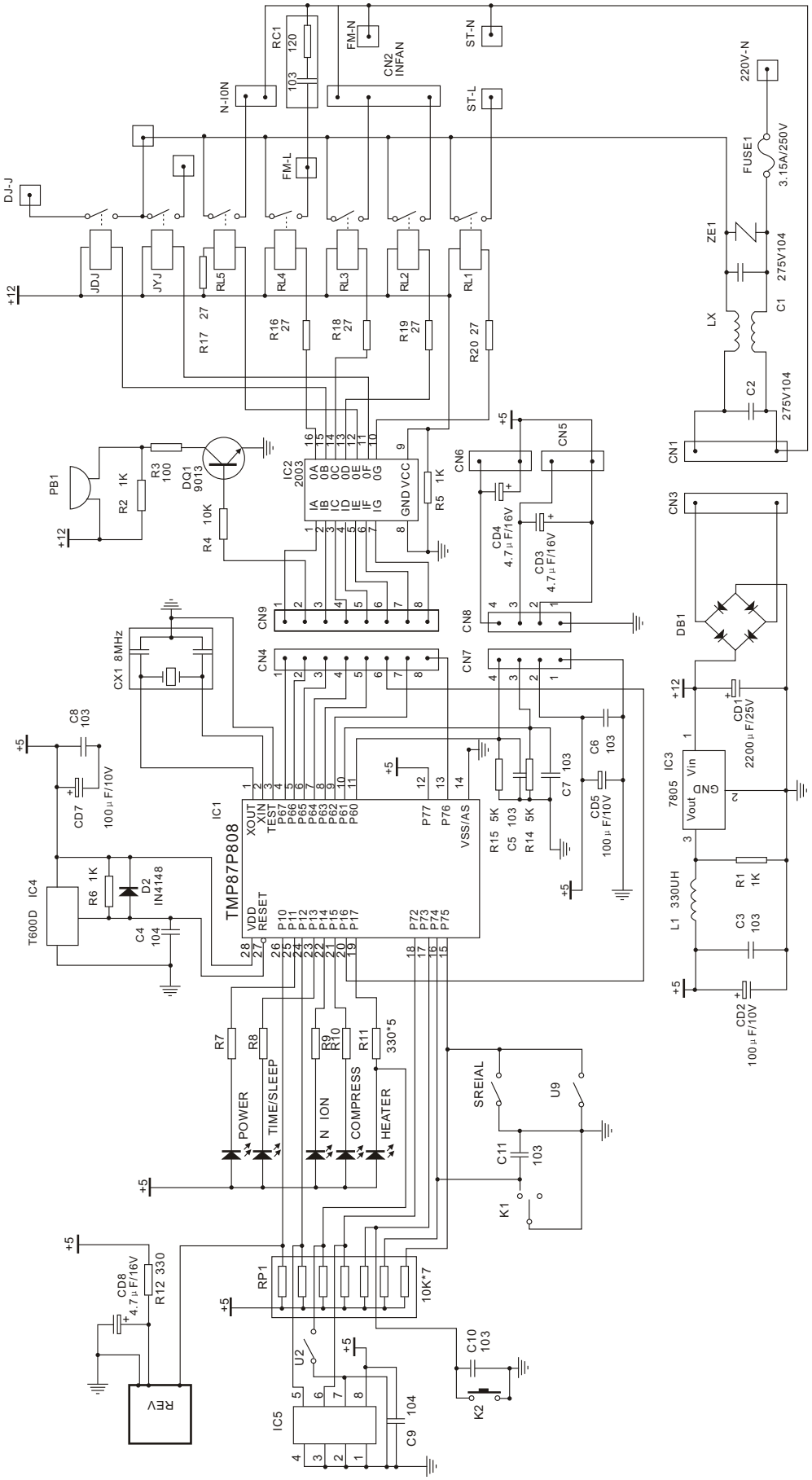
DJ-J
+12
JDJ
JYJ
RL5
RL4
RL3
RL2
RL1
R17 27
R16 27
R18 27
R19 27
R20 27
N-I0N
RC1
120
103
FM-N
CN2
INFAN
ST-N
ST-L
FM-L
220V-N
FUSE1
3.15A/250V
ZE1
275V104
C1
LX
C2
275V104
CN1
PB1
R2 1K
R3 100
DQ1
9013
R4 10K
IC2
2003
R5 1K
CN6
CN5
CD4
4.7μF/16V
CD3
4.7μF/16V
CN9
CN8
CN3
DB1
CX1 8MHz
CN4
CN7
CD1
2200μF/25V
C8
103
CD7
100μF/10V
IC1
TMP87P808
XOUT
XIN
TEST
VDD
RESET
VSS/AS
C6
103
CD5
100μF/10V
C7 103
R15 5K
C5 103
R14 5K
IC3
7805
Vin
Vout
GND
L1 330UH
R1 1K
C3
103
CD2
100μF/10V
IC4
T600D
R6 1K
D2
IN4148
C4
104
R7
R8
R9
R10
R11
330*5
POWER
TIME/SLEEP
N ION
COMPRESS
HEATER
SREIAL
U9
C11
103
K1
CD8
4.7μF/16V
R12 330
RP1
10K*7
U2
C10
103
K2
REV
IC5
C9
104

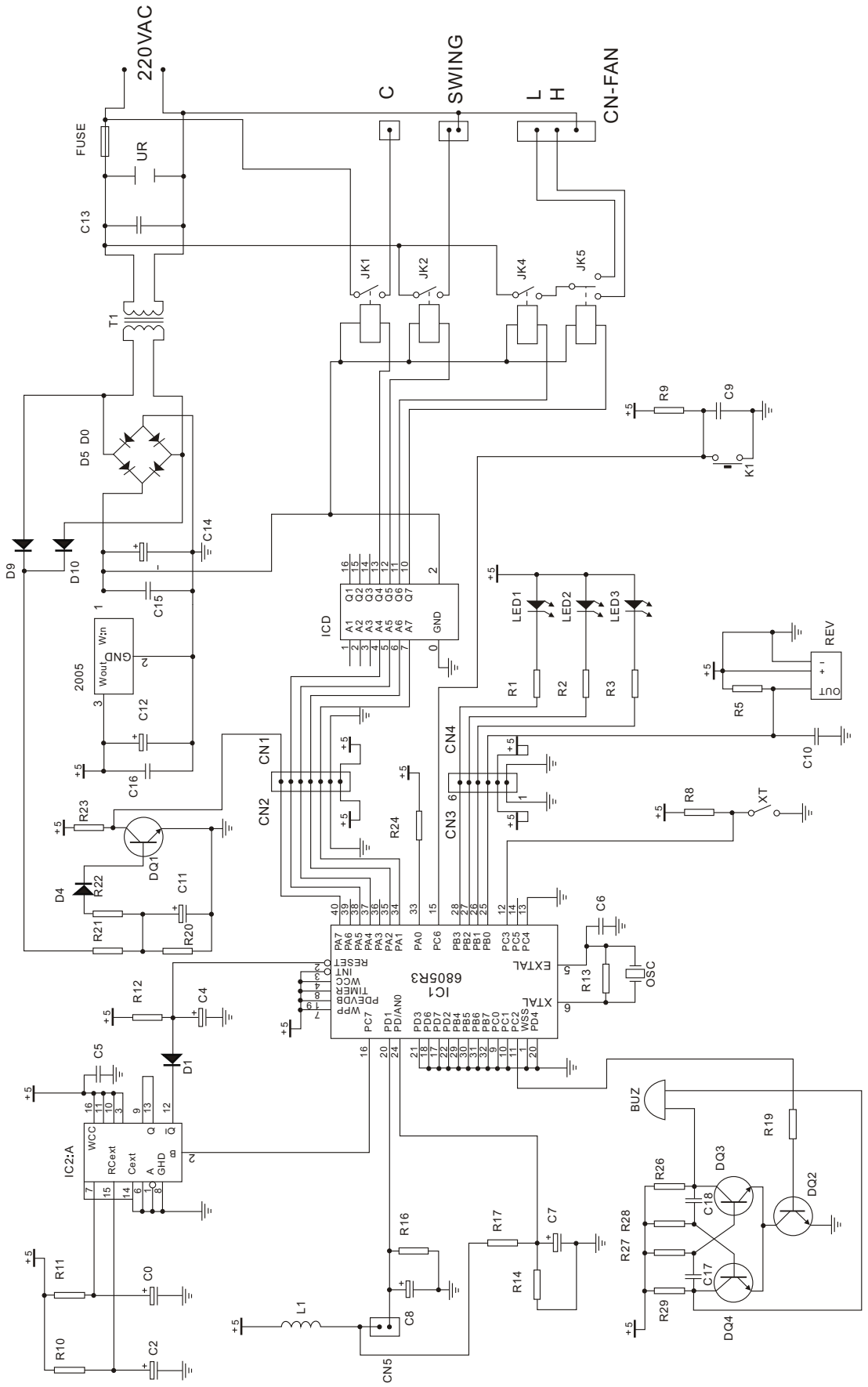
220VAC
FUSE
UR
C13
T1
D5 D0
D9
D10
C14
C15
2005
Wout
Win
GND
C12
C16
+5
R23
DQ1
D4
R22
R21
C11
R20
CN1
CN2
ICD
Q1 Q2 Q3 Q4 Q5 Q6 Q7
A1 A2 A3 A4 A5 A6 A7
GND
R24
CN4
CN3
JK1
JK2
JK4
JK5
C
SWING
L
H
CN-FAN
R9
C9
K1
LED1
LED2
LED3
R1
R2
R3
REV
OUT
R5
C10
R8
XT
C6
OSC
R13
EXTAL
XTAL
IC1
680SR3
PA7 PA6 PA5 PA4 PA3 PA2 PA1 PA0 PC6
PB3 PB2 PB1 PB0
PC3 PC5 PC4
PC7 PD1 PD/AN0
PD3 PD6 PD7 PD2 PB4 PB5 PB6 PB7 PC0 PC1 PC2 VSS PB4
WPP
PDEVDB
TIMER
WCC
INT
RESET
R12
C4
D1
C5
IC2:A
WCC
RCext
Cext
A
GHD
B
Q
Q̄
R11
C0
R10
C2
R16
C8
L1
CN5
R17
C7
R14
BUZ
R19
DQ2
R26
DQ3
C18
R28
R27
C17
R29
DQ4

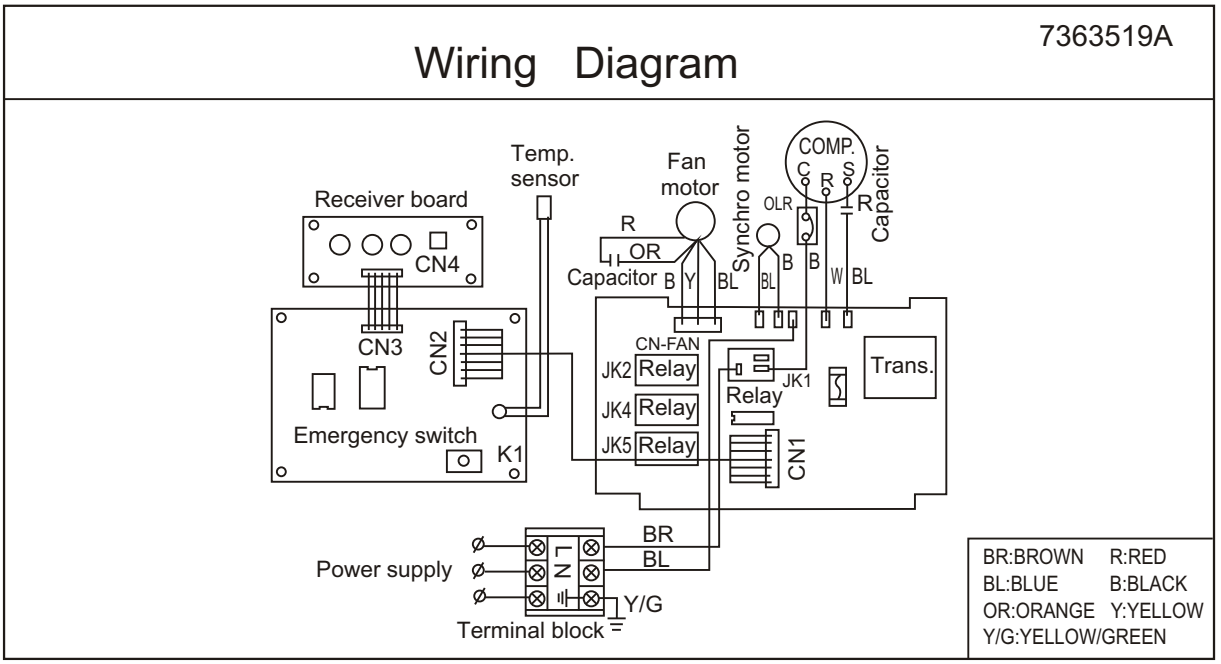


HW-09CD03

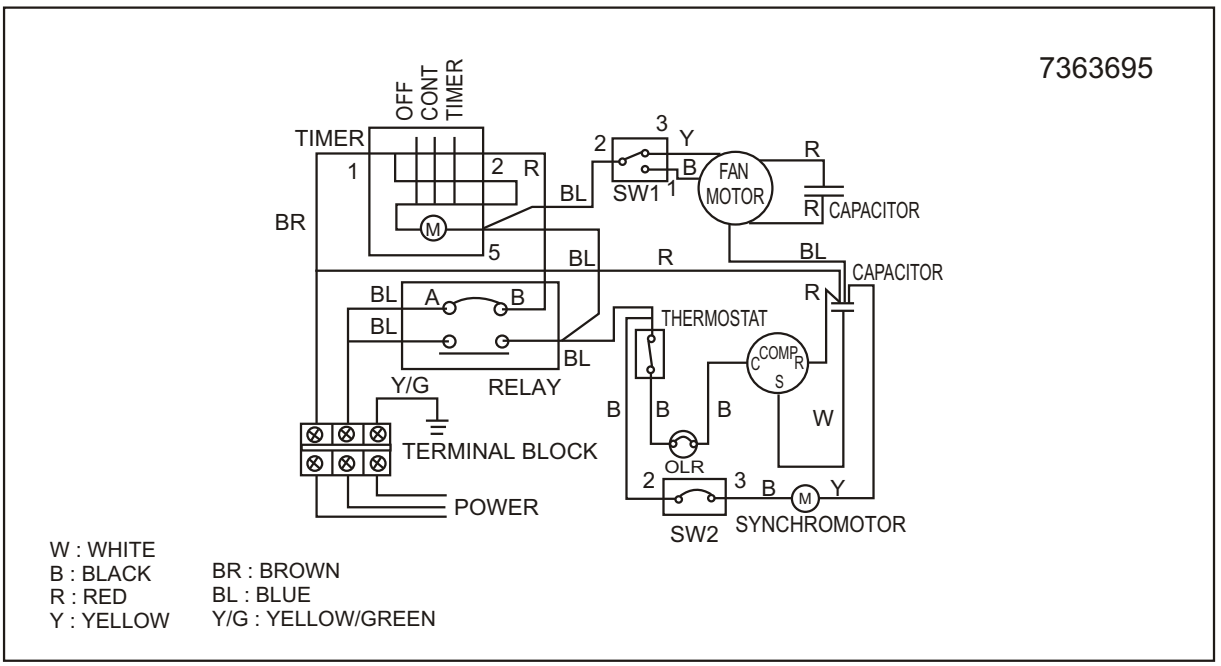


HW-09C03
HW-09CE03

## WIRING DIAGRAM

7363749

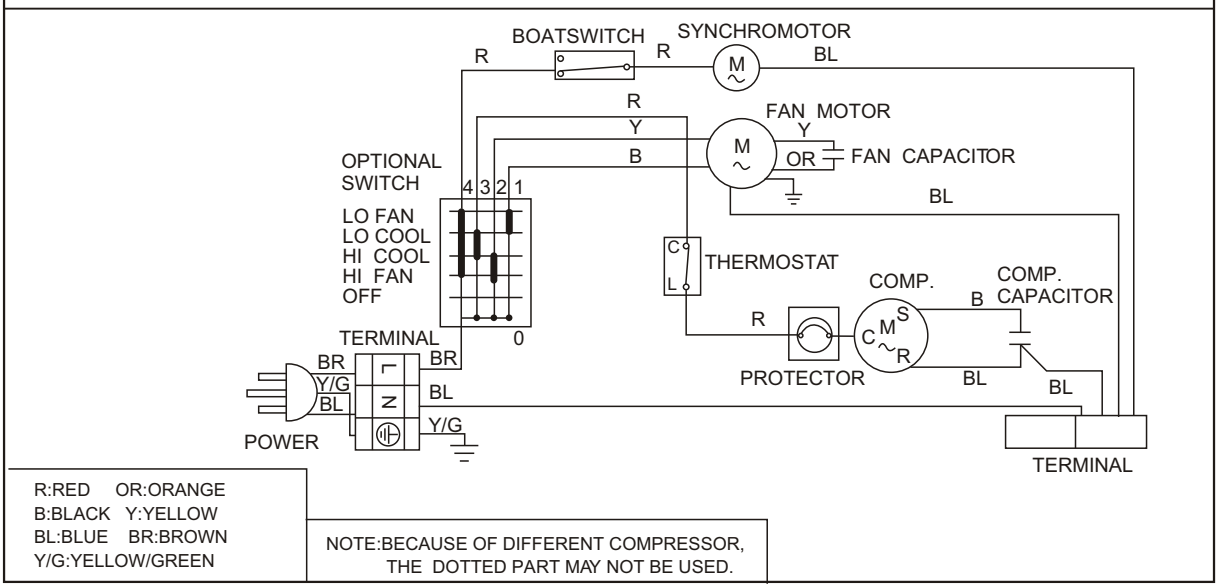


HW-07CA03

## WIRING DIAGRAM

7363720

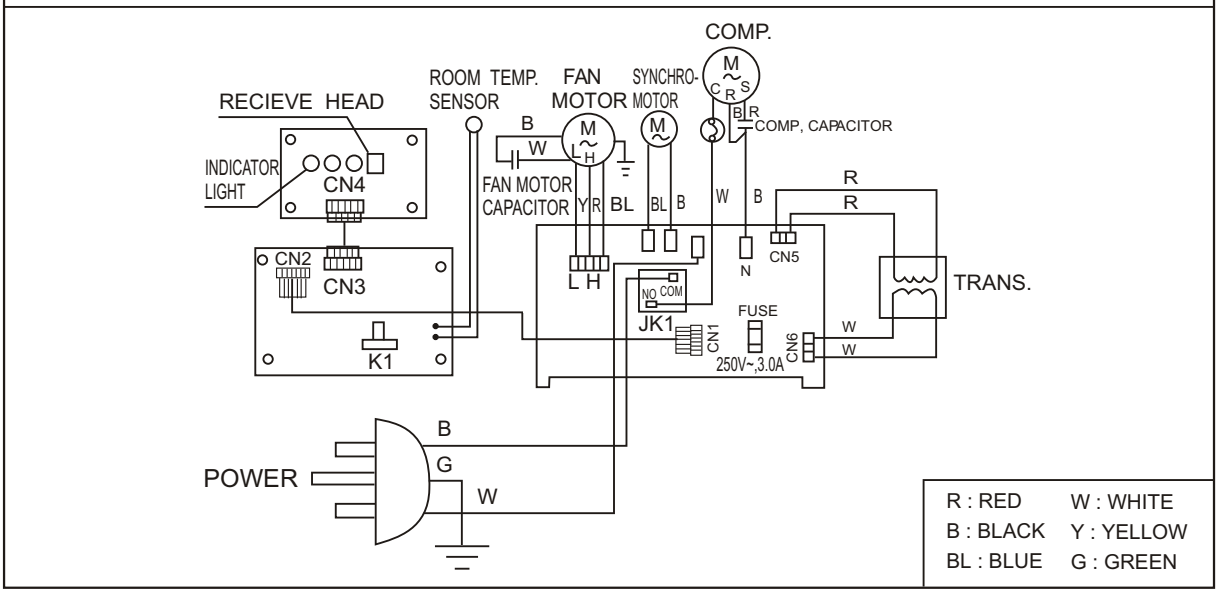


HW-09CA12

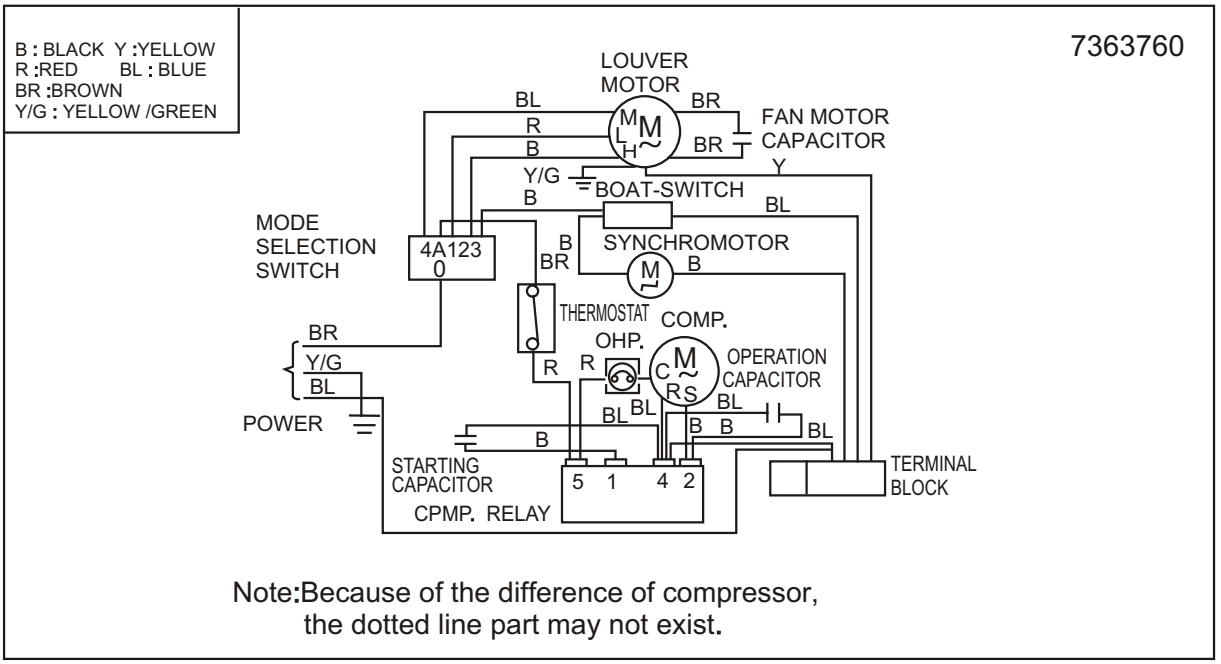


Note:Because of the difference of compressor, the dotted line part may not exist.

HW-24C03 HW-24CA03 HW-24CA13(T3)

## WIRING DIAGRAM

7363744

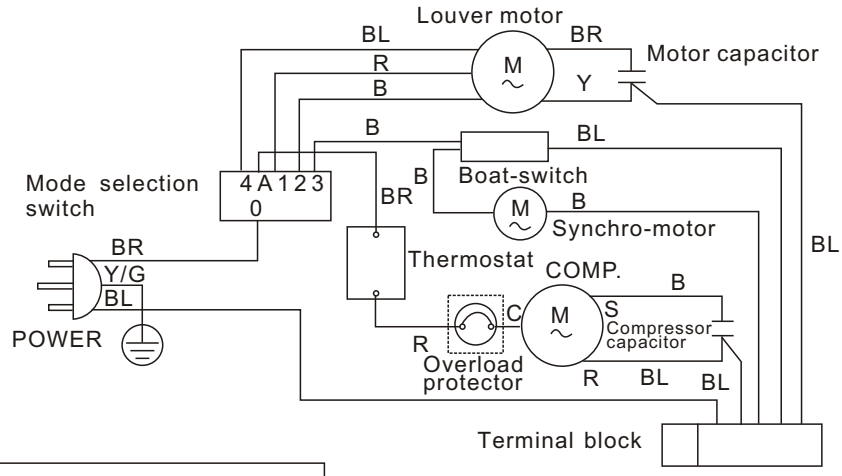


Note: Because of the difference of compressor, the dotted line part may not exist.

R:RED
BL:BLUE BR:BROWN
Y:YELLOW B:BLACK
Y/G:YELLOW/GREEN

| | |
|---|---|
| EA-1990W | HW-18CC03 |
| HW-18CE03 | HW-18C13(T3) |

## WIRING DIAGRAM

7363748

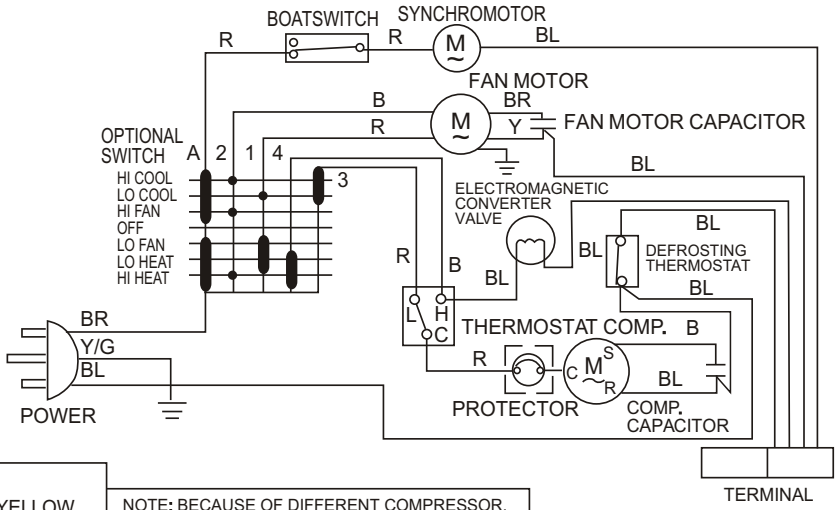


R : RED
B : BLACK Y : YELLOW
BL : BLUE BR : BROWN
Y/G : YELLOW/GREEN

NOTE: BECAUSE OF DIFFERENT COMPRESSOR, THE DOTTED PART MAY NOT BE USED.

HW-18HA03

# 9. MAINTENANCE ANDTROUBLE SHOOTING

## 1.Maintenance

**Air filter cleaning: “Please clean the air filter every two weeks”**

When dirt accumulates on air filter, air circulation will be blocked, which causes poor cooling. It is advisable to clean. air filter every two weeks for longer operation.

**Removal of air filter**

(1) Loose the air filter by pushing “PUSH” at both ends of air inlet.
(2) Hold the air filter by frame and lift it forward for approx. 5 mm.
(3) Pull it out downward.

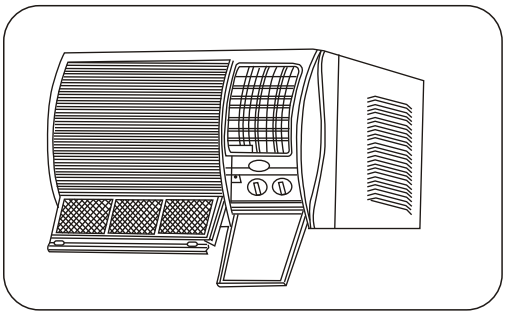

**Air filter cleaning**

1.Gently flap the dirt off the air filter.
2.Carefully wash air filter in warm water (below 40℃ ).To obtain better cleaning effect, soap water or neutral detergent may be used.
3. Flush air filter carefully with clean water after removing dirt. Let it dry completely.

**Installation of filter**

(1) Hold the filter by its frame and push it upward along the groove under air inlet until it comes to a complete stop.
(2) Push the part marked with “PUSH” until you hear a click.

## Maintenance

### Disposal of condensate

1. The drain hole on the bottom of the air conditioner will be clogged by a rubber stopper to make the condensate. in the bottom tray be spattered onto the condensation to raise efficiency of heat exchange. If the spattering sound disturbs you, you can adopt the method illustrated below.
   Condensation running out from the drain hole on the back of the unit
2. Remove the rubber stopper from the drain hole on the bottom in order to make the condensate run out. In this method the efficiency of air conditioner will be slightly lowered.
   In the both methods above, an extended hose (available on the market) can be connected to the drain connecting pipe if necessary.

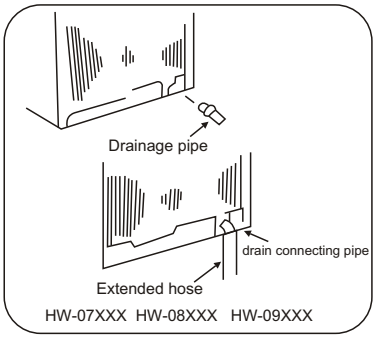


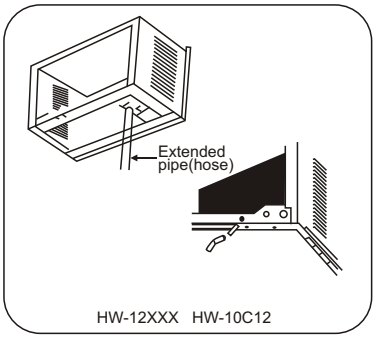


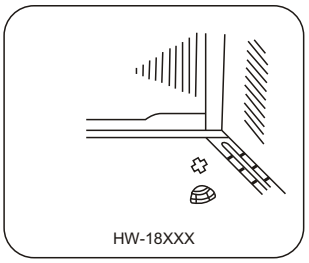


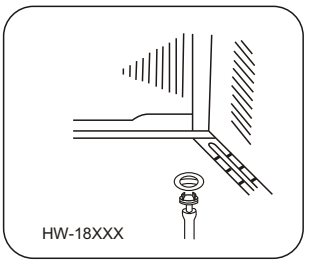


**Cautions**

- Power cord: Be sure to use the exclusive power cord.
- Change installation place: If air-con need to be changed to another place please contact the dealer, who sold you the unit.

## Maintenance

- Avoid opening door and window unless necessary

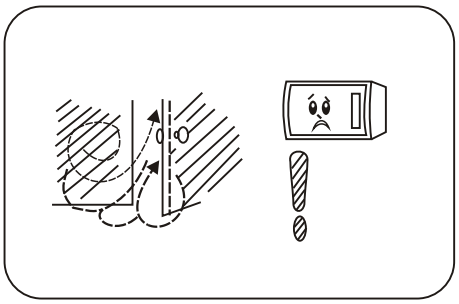

- Don't be exposed to cold air for a long time.

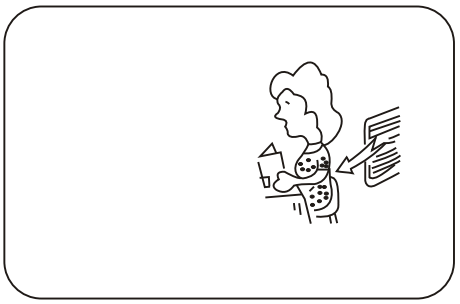

- Use curtain or blind
  Direct sunlight may reduce cooling effect, always use window curtain.

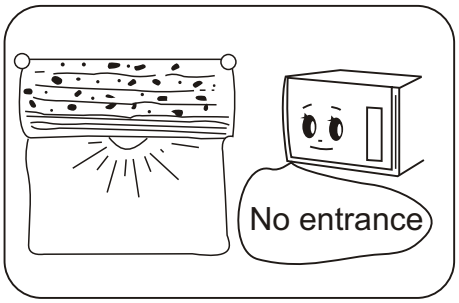


- Keep heat source away from air conditioner.

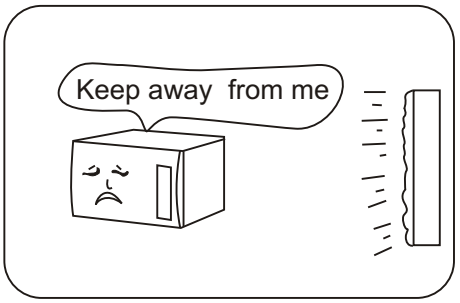


- Set temp. a little bit higher before going to bed.

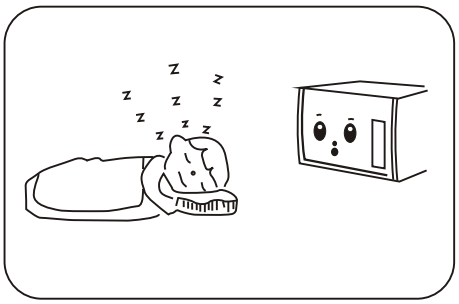

- After unit stops, don't restart it until 3 min. have elapsed.
  (Or, fuse may blow out or motor burnt.)

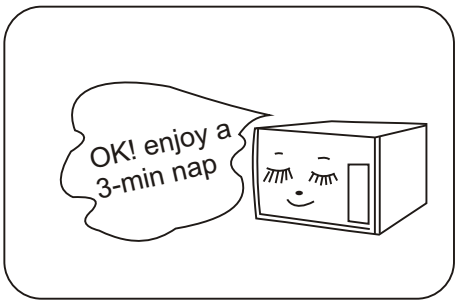

## 2.Troubleshooting Information

**⚠ WARNING**

To avoid risk of electrical shock, personal injury, or death, disconnect electrical power source to unit and discharge capacitor through a 10,000 ohm resistor before attempting to service, unless test procedures require power to be connected. Ensure all ground wires are connected before certifying unit as repaired and/or operational.

**⚠ CAUTION**

Units covered in this manual are polarized. Reversing polarity of a unit or any of its components will cause damage. To avoid reversing polarity, any wires disconnected or removed during service *must* be reconnected to the same location. To ensure wires are reconnected to the proper location, tag or otherwise mark the wires before disconnecting or removing.

**Tools and Equipment**

Accurate diagnosis and repair of malfunctioning air conditioners requires proper tools and equipment. In addition to standard hand tools (screw drivers, pliers, sockets, etc.), the following equipment is required:

- Thermocouple type temperature tester, with sufficient range to meet all testing and measuring requirements.
- Multimeter(combination voltmeter, ammeter, and ohmmeter) for reading current loads during start up and normal operation, verifying voltage levels, and testing various components for continuity.
- Accurate leak detector, to check for refrigerant leaks.
- Vacuum pump capable of removing all non-condensable material in sealed system.
- Charging manifold and related equipment to determine and replenish exact refrigerant charges.
- Recovery cylinder and related equipment to recover and store refrigerant charge in sealed system.

Additional tools and equipment may be required.

**Troubleshooting Table**

Troubleshooting table on following pages contains symptoms that may be seen in a malfunctioning air conditioner. Each group of symptoms is accompanied by one or more possible causes. Each possible cause is accompanied by a remedy, or a test to determine if suspect component(s) are working properly.

# Troubleshooting Information

**⚠ WARNING**

To avoid risk of electrical shock, personal injury, or death, disconnect electrical power source to unit and discharge capacitor through a 10,000 ohm resistor before attempting to service, unless test procedures require power to be connected. Ensure all ground wires are connected before certifying unit as repaired and/or operational.

| Symptom | Possible Causes | Corrective Action |
|---|---|---|
| Fan motor will not operate | No power supplied to unit | Check fuse box/circuit breaker for blown fuse or tripped breaker. Replace/reset. |
| | Power supply cord failed | Check power cord for opens. Replace cord if failed. |
| | Wire(s) disconnected or loose | Ensure all connections are tight and secure. |
| | Fan motor capacitor failed | Check capacitor for open/short. Replace if failed. **NOTE:** Discharge capacitor before testing. |
| | Fan motor failed | Check fan motor windings for shorts/opens. Replace if failed. |
| | Rotary control failed | Ensure all control connections are tight and secure. Check control for proper operation and installation. Control must not hang between settings. Replace if failed. **NOTE:** Eliminate all other possible causes before replacing rotary control. |
| Fan blade will not rotate | Fan hitting shroud or blower wheel hitting scroll | Check fan blade/blower wheel for proper alignment on motor shaft. Reposition if necessary. |
| Fan motor operates intermittently | Wire(s) disconnected or loose | Ensure all connections are tight and secure. Correct as required. |
| | Rotary control failed | Ensure all control connections are tight and secure. Check control for proper operation and installation. Replace if failed. **NOTE:**Eliminate all other possible causes before replacing rotary control. |
| | Cycling on motor protector | Replace motor. |
| Fan motor noisy | Outside coil fan blade or inside coil blower wheel loose or improperly aligned | Check fan blade/blower wheel for proper position. Reposition if necessary. Ensure hardware attaching fan blade/blower wheel to motor shaft is tight, Tighten if loose; replace if stripped. |
| | Fan motor mounting hardware/bracket loose or grommets worn (if applicable) | Check mounting bolts/bracket for tightness. Tighten if necessary. Inspect grommets for wear. Replace if necessary. |
| | Worn fan motor bearings | Replace motor. |

# Troubleshooting Information

**⚠ WARNING**

To avoid risk of electrical shock, personal injury, or death,disconnect electrical power source to unit and discharge capacitor through a 10,000 ohm resistor before attempting to service, unless test procedures require power to be connected. Ensure all ground wires are connected before certifying unit as repaired and/or operational.

| Symptom | Possible Causes | Corrective Action |
|---|---|---|
| Compressor does not run, fan motor operates normally. | Wire(s) disconnected or loose | Ensure all connections are tight and secure. Correct as required. |
| | Compressor motor capacitor failed. | Check capacitor for open/short. Replace if failed. **NOTE:** Discharge capacitor before testing. |
| | Compressor failed. | Check compressor motor windings for open/short. Replace compressor if failed. |
| | Overload protector open. | Check protector for continuity. If open, replace. **NOTE:**Ensure compressor/overload are below trip temperature before testing. |
| | Rotary control failed. | Ensure all control connections are tight and secure. Check control for proper operation. Replace if failed. **NOTE:**Eliminate all other possible causes before replacing rotary control. |
| Compressor cycles on and off. | Wire(s) disconnected or loose. | Ensure all connections are tight and secure. Correct as required. |
| | Supply voltage out of specification. | Check input voltage for proper levels. Take appropriate action if voltage levels out of specification. |
| | Overload protector open. | Check protector for continuity. If open, replace. **NOTE:**Ensure compressor/overload are below trip temperature before testing. |
| | Restricted air flow. | Inspect air filter, indoor/outdoor coil for dirt. Clean as required. Check fins on coils for damage. Straighten fins if bent, attempt other repairs as necessary. Replace coil if repairs cannot be made. |
| | Fan motor failed. | Check fan motor for proper operation. Replace if failed. |
| | Compressor motor capacitor failed. | Check capacitor for open/short. Replace if failed. **NOTE:**Discharge capacitor before testing. |
| | Sealed refrigerant system failure. | Test sealed system for proper charge, leaks, and restrictions. Repair as required. |
| Insufficient cooling | Low refrigerant charge. | Test sealed system for proper charge. Ensure system is free of leaks. Repair as required. |
| | Restricted air flow. | Inspect air filter, indoor/outdoor coil for dirt. Clean as required. Check fins on coils for damage. Straighten fins if bent, attempt other repairs as necessary. Replace coil if repairs cannot be made. |

# Troubleshooting Information

**⚠ WARNING**

To avoid risk of electrical shock, personal injury, or death, disconnect electrical power source to unit and discharge capacitor through a 10,000 ohm resistor before attempting to service, unless test procedures require power to be connected. Ensure all ground wires are connected before certifying unit as repaired and/or operational.

| Symptom | Possible Causes | Corrective Action |
|---|---|---|
| Insufficient cooling | Vent screen installed in partition panel. | Remove vent screen and install vent plug in partition panel. |
| | Unit undersized for area/ room. | Reduce area being cooled or replace unit with larger capacity model. |
| Excessive noise | Outside coil fan blade or inside coil blower wheel loose or improperly aligned. | Check fan blade/blower wheel for proper position. Reposition if necessary. Ensure hardware attaching fan blade/blower wheel to motor shaft is tight. Tighten if loose, replace if stripped. |
| | Compressor mounting hardware loose or grommets worn. | Check mounting bolts for tightness. Tighten if necessary. Inspect grommets for wear. Replace if necessary. |
| | Free parts, loose screws causing or allowing excessive vibration. | Inspect unit for parts that may have worked free, loose/ missing screws, other problems that may cause excessive vibration. Repair as required. |
| | Worn fan motor bearings. | Check bearings for wear/loss of lubricant. Replace motor if either condition is found. |
| | Fan motor mounting hardware/bracket loose or grommets worn (if applicable). | Check mounting bolts/bracket for tightness. Tighten if necessary. Inspect grommets for wear. Replace if necessary. |
| | Copper tubing improperly dressed or routed. | Inspect copper tubing for excessive vibration. Secure tubing as required. |
| | Compressor internal noise. | Inspect compressor for proper operation. Replace as required. |
| No cooling. | Low refrigerant charge or leak in sealed system. | Test sealed system for proper charge. Ensure system is free of leaks. Repair as required. |
| | Blockage (restriction) in sealed system. | Evacuate sealed system. Remove blockage, recharge. |
| | Rotary control failed. | Ensure all control connections are tight and secure. Check control for proper operation. Replace if failed. **NOTE:**Eliminate all other possible causes before replacing rotary control. |
| | Compressor failed. | Check compressor motor windings for open shorts. Check compressor seals. Perform compressor direct wiring test. Replace compressor if failed. |

# Troubleshooting Information

**⚠ WARNING**

To avoid risk of electrical shock, personal injury, or death, disconnect electrical power source to unit and discharge capacitor through a 10,000 ohm resistor before attempting to service, unless test procedures require power to be connected. Ensure all ground wires are connected before certifying unit as repaired and/or operational.

| Symptom | Possible Causes | Corrective Action |
|---|---|---|
| Wattage slowly decreases below minimum specification. | Undercharged, restricted strainer or plugged capillary tube. | Test sealed system for proper charge. Ensure system is free of leaks/blockage. Repair as required. Evacuate/ recharge sealed system. |
| Wattage decreases immediately. | No refrigerant.<br><br>Compressor failed. | Test sealed system for proper charge. Ensure system is free of leaks. Repair as required.<br><br>Check compressor motor windings for open/shorts. Replace compressor if failed. |
| Wattage continuously high. | Refrigerant overcharge. | Test sealed system for proper charge. Repair as required. |
| Evaporator coil partially frosted. | System low on refrigerant.<br><br>Restricted capillary tube.<br><br>Insufficient air flow.<br><br>Failed fan motor | Test sealed system for proper charge. Ensure system is free of leaks. Repair as required.<br><br>Replace capillary tube.<br><br>Inspect air filter, indoor/outdoor coil for dirt. Clean as required. Check fins on coils for damage. Straighten fins if bent, attempt other repairs as necessary. Replace coil if repairs cannot be made.<br><br>Check fan motor for proper operation. Replace if failed. |
| Evaporator completely iced. | Low outside temperature.<br><br>Restricted capillary tube.<br><br>Insufficient air flow.<br><br>Thermostat not cycling. | Turn unit off.(Consumer education)<br><br>Replace capillary tube.<br><br>Inspect air filter, indoor/outdoor coil for dirt. Clean as required, Check fins on coils for damage. Straighten fins if bent, attempt other repairs as necessary. Replace coil if repairs cannot be made.<br><br>Replace Thermostat. |

# 10.SYSTEM FLOW CHART

## Refrigerating Diagram

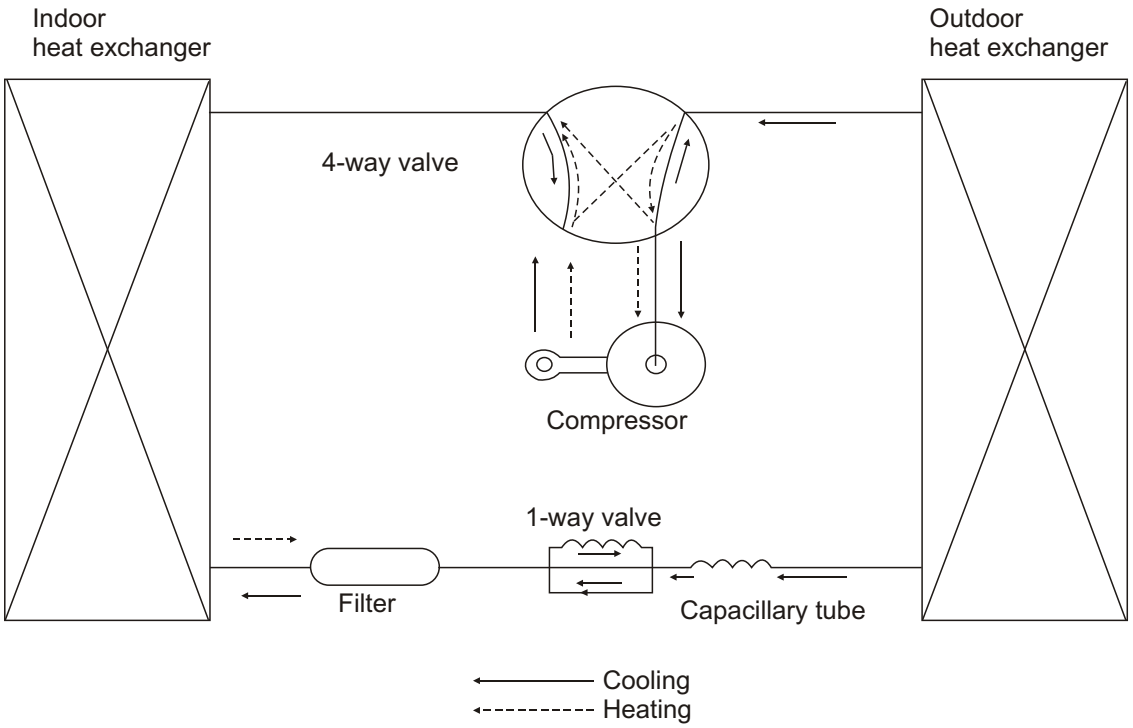

HW-12HA04, HW-12eA04 flow chart for program

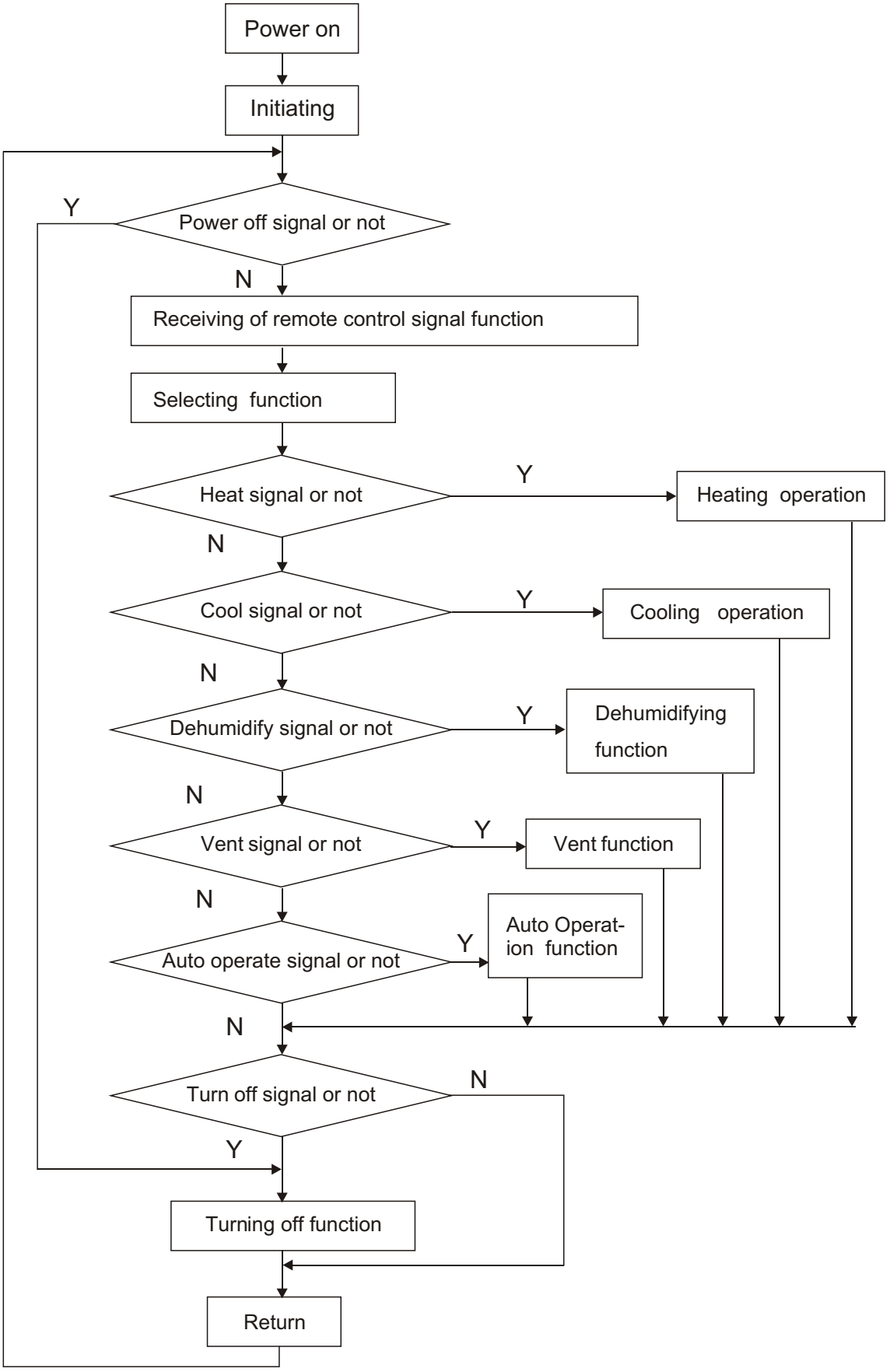

HW-09CA12, HW-09CD03, AW124AAMBA, AW122AAMCA flow chart for program

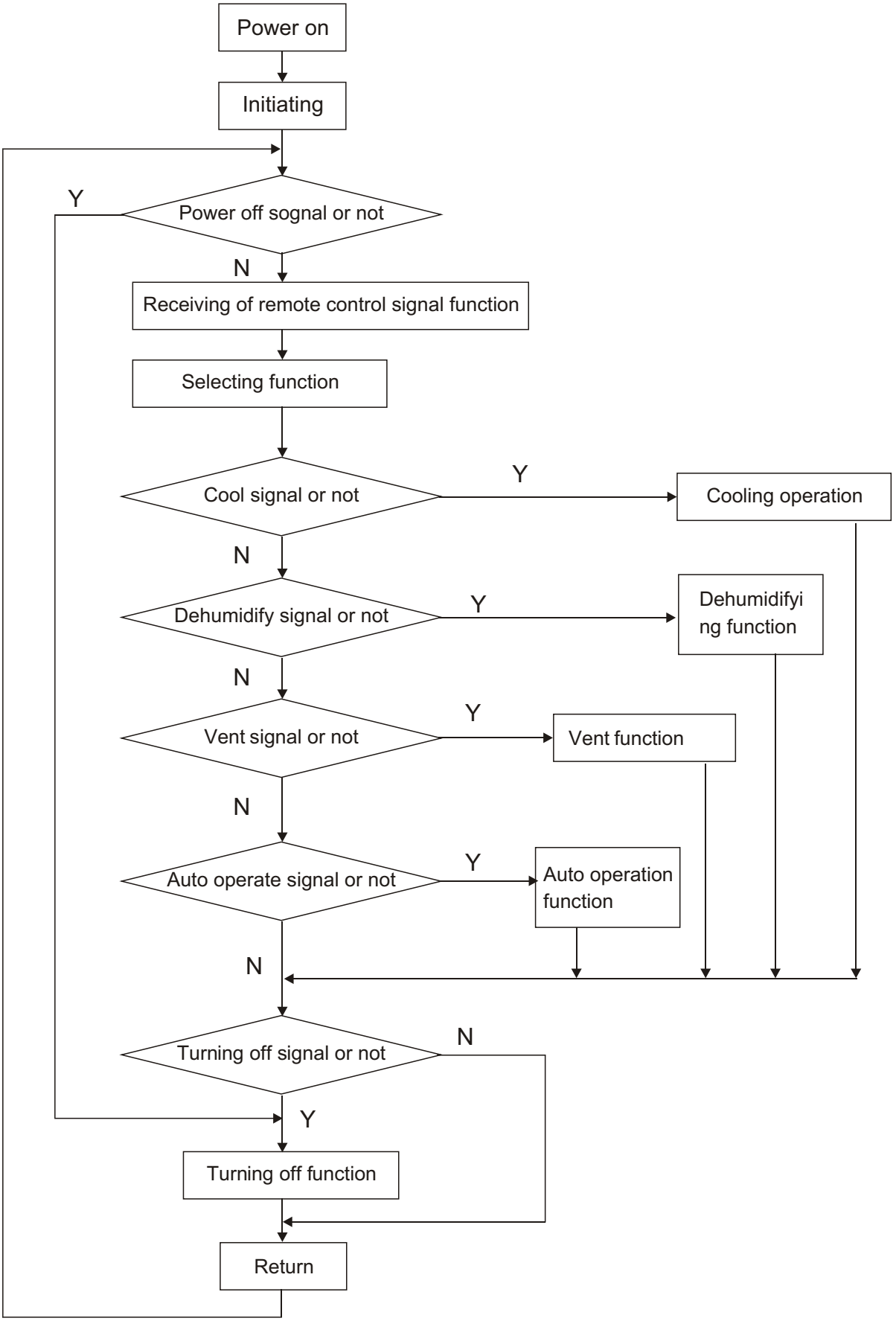

AW122AAACA flow chart for program

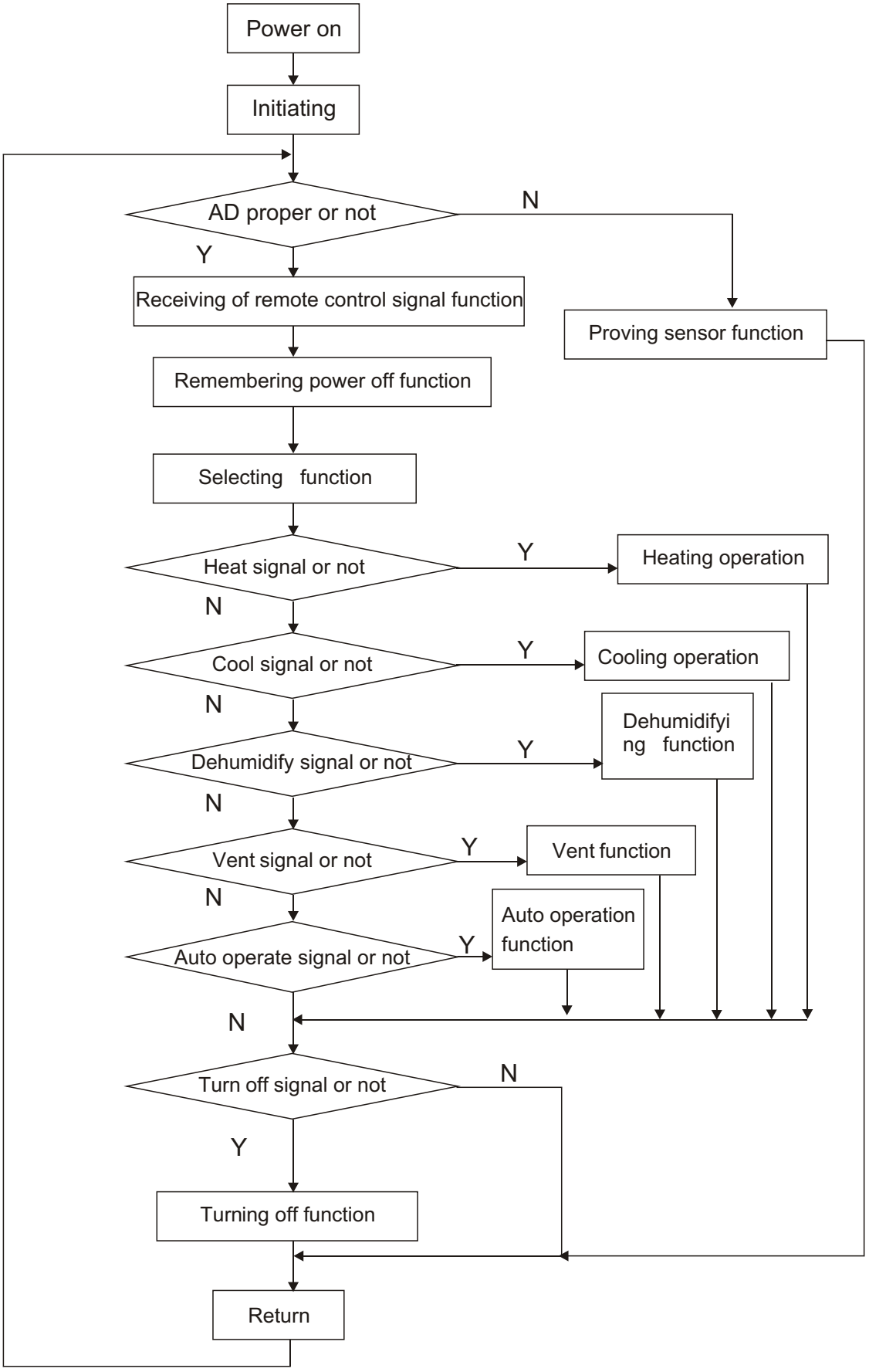

AW122AAACA flow chart for program

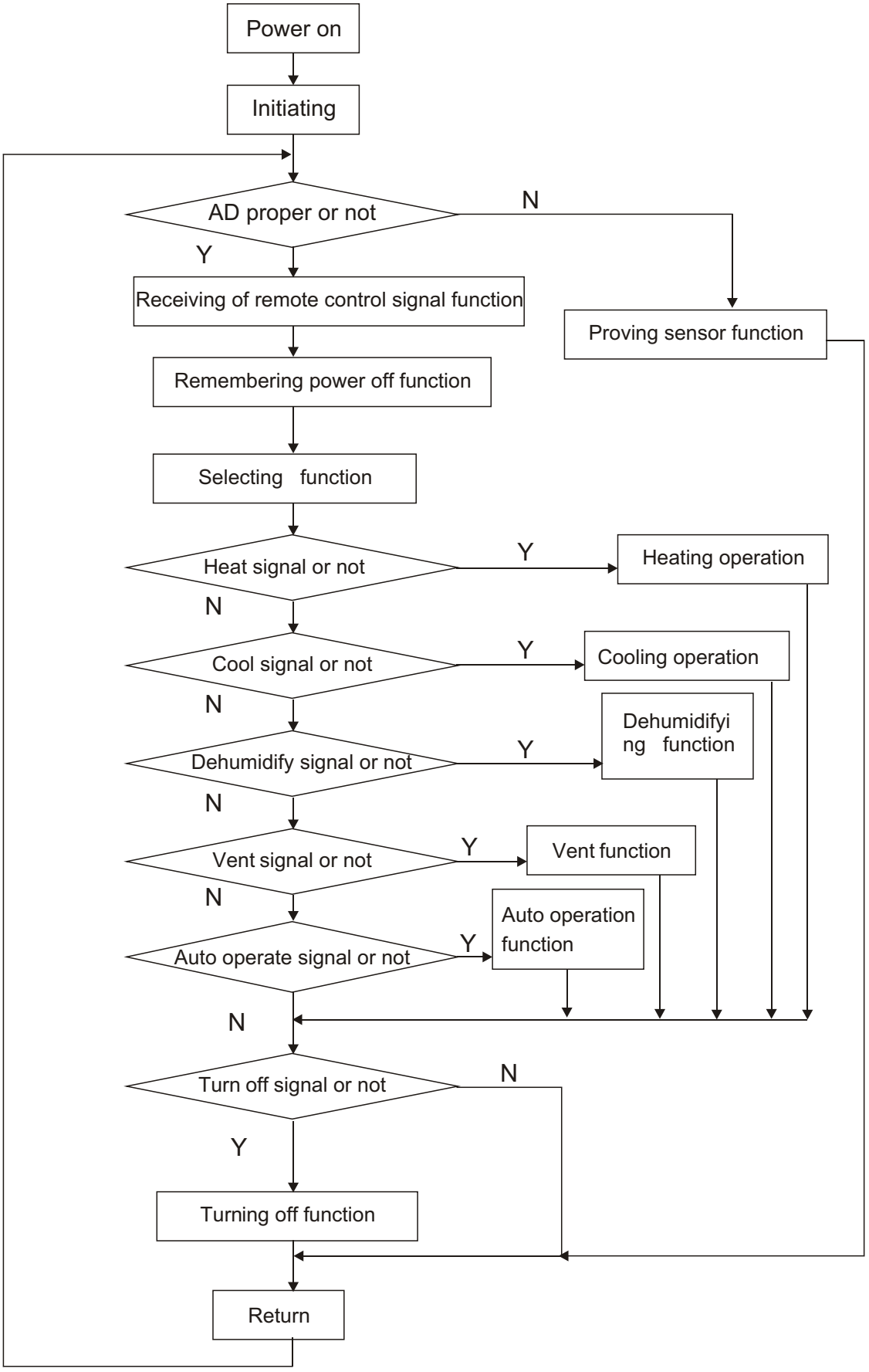

HW-09CA12, HW-09CD03, AW124AAMBA, AW122AAMCA flow chart for program

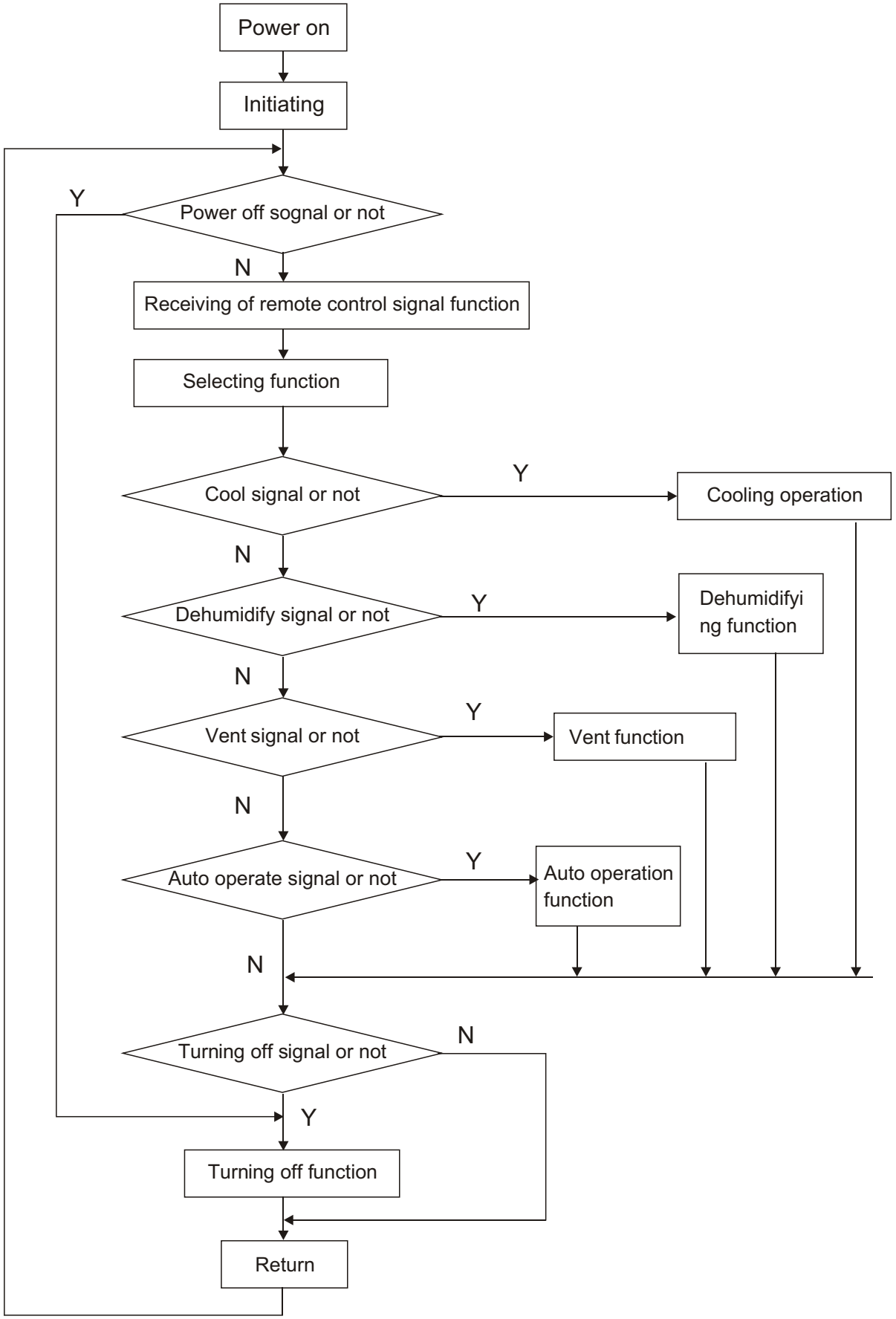

HW-12HA04, HW-12eA04 flow chart for program

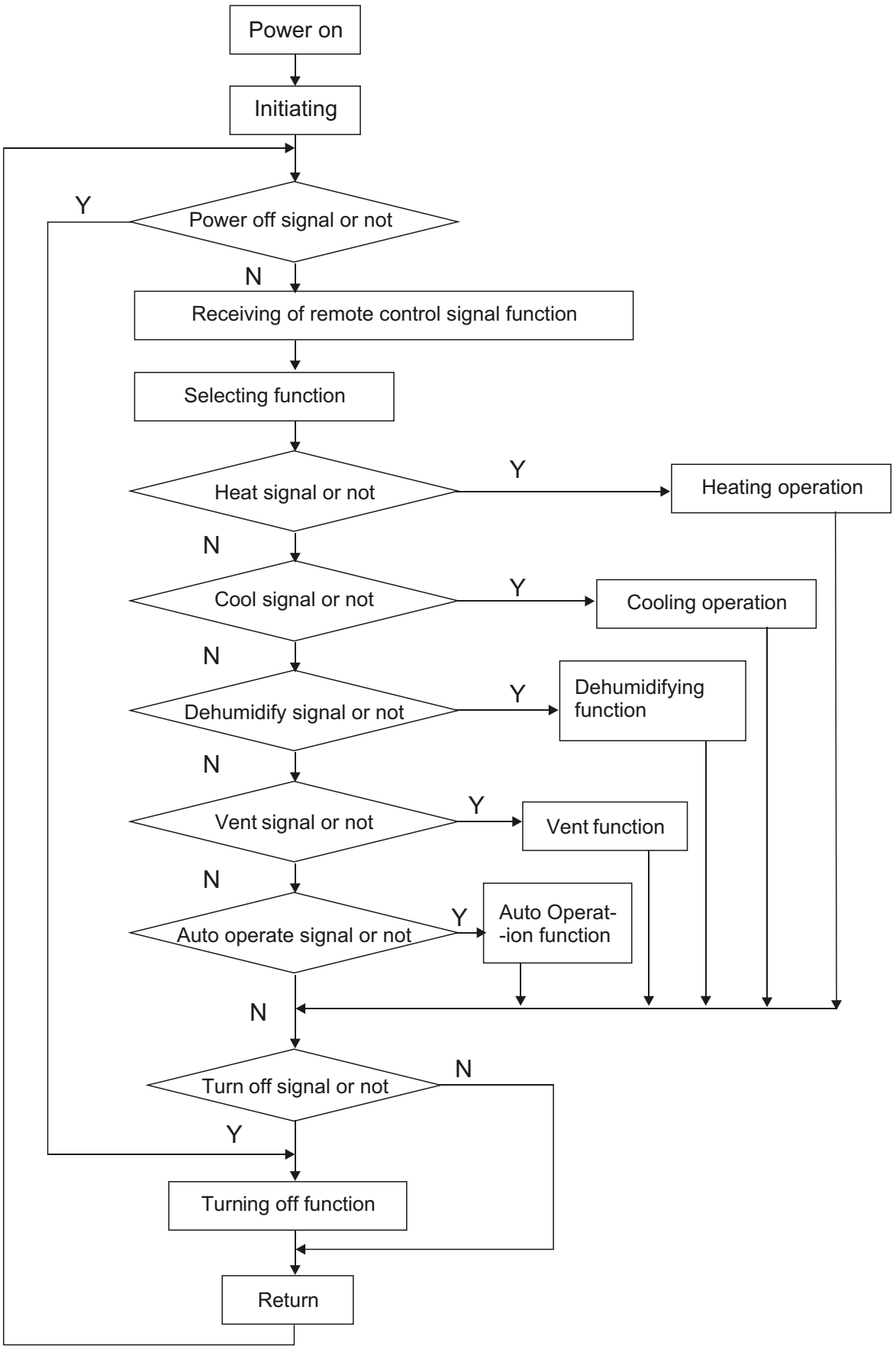

AW248AAMBA flow chart for program

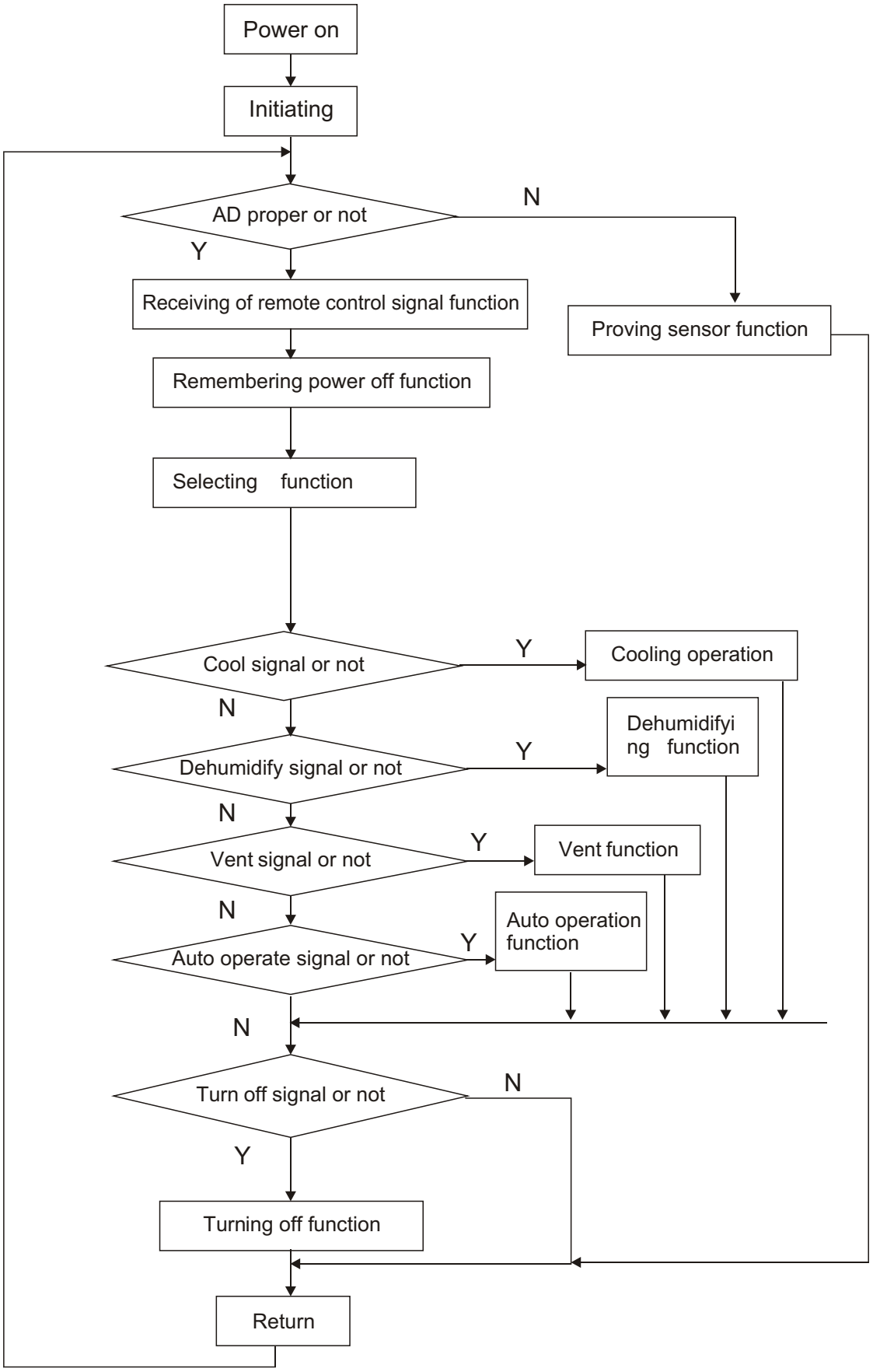

## Installation Guide

The installation of air conditioner(only for reference)

1. Cut a wall hole or a window hole (see Fig.1).

| | A | B |
|---|---|---|
| HW-09XX | 350 | 530 |
| HW-12XX | 410 | 570 |
| HW-18XX | 438 | 670 |

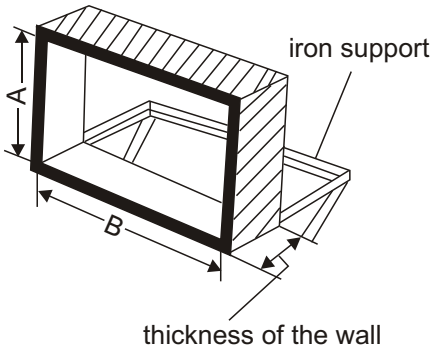


Fig.1

2. Fix the iron support in a firm place with expansible screws.

3. Take the air conditioner and its attachments out from the packing carton.

4. Let the rear of the air conditioner raise slightly, the drain hole on the bottom can be seen.
   Clog it with a black rubber stopper attached to the air conditioner(see Fig.2)

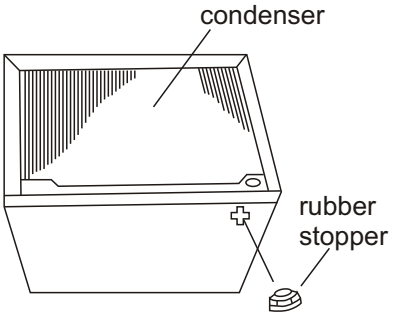


Fig.2

5. Insert the drain connecting pipe (with a seal circle) attached to the air conditioner into the vertical drain hole on the bottom (see Fig.3)

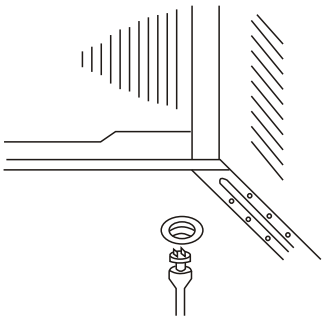

Fig.3

6. The condensate needing to be led to the designated place, buy a soft plastic pipe with internal diameter of 16mm to connect the drain connecting pipe and tied it tightly (see Fig.3)

7. All attachments being fixed, put the air conditioner on the iron support. If there is a drain hose, lead it to a required place (see Fig.4) not for HW-18XXX.

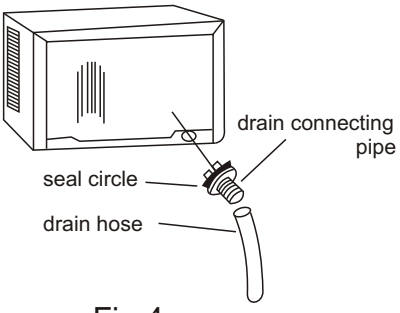


Fig.4

8. Chink the wall and window with soft sponges or rubber bits in order to refrain from outside noises coming in or cooling air going out.
9. Air conditioner being fixed, insert the power plug in the socket, open the operation panel cover, turn the temperature setting to “Test run”, turn successively the mode selection to “Hi fan” and “Hi cool” “Lo cool” and “Lo fan”, turn the auto swinging switch to “ON” to inspect the air conditioner's start and running performance(see Fig.5)
10. If “Test run” is normal, turn mode selection to “OFF”, turn the temperature setting to “9” and close the operation panel cover. Now the air conditioner is ready for use.

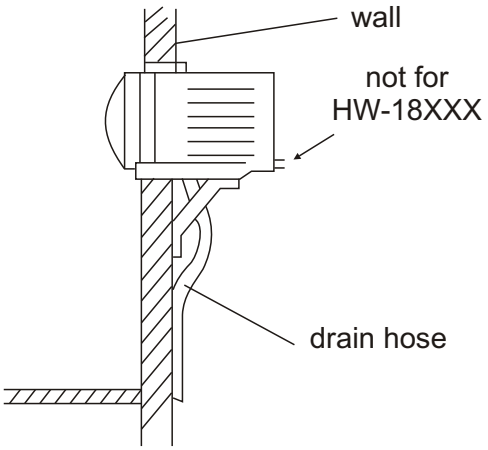


Fig.5

The machine is adaptive in following situation

1.Applicable ambient temperature range:

| | | | |
|---|---|---|---|
| Cooling | Indoor side | Maximum: D.B/W.B<br>Minimum: D.B/W.B | 32℃/23℃<br>18℃/14℃ |
| | Outdoor side | Maximum: D.B 43℃<br>Minimum: D.B 18℃ | |
| Heating | Indoor side | Maximum: D.B 27℃<br>Minimum: D.B 15℃ | |
| | Outdoor side | Maximum: D.B/W.B<br>Minimum: D.B/W.B | 24℃/18℃<br>-7℃/-8℃ |

esp. For(T3) type. eg. HW-18C13(T3). applicable ambient temperature is invalid. For cooling only type, heating temperature range is invalid.

2. If the supply cord is damaged. it must be replaced by the manufacturer or its service agent or a similar qualified person.
3. After installation, the power plug should be easily reached.
4. The wiring method should be in line with the local wiring standard.

## Installation instruction

**Selection of the installation position**

1. Select position where the structure is firm.
2. Select position where the air inlet and outlet are smooth without obstacles.
3. Select position where the cooled air can be blown to every corner of the room.
4. Select position where there's no direct sunlight. If the sunlight is inevitable. sunshading device is required.
5. Select position where the outdoor airflow will not influence the neighbors.
6. Select position where the drainage is smooth.
7. Select position where there's no dangerous gas or oil smoke nearby.
8. An extention cord is not recommened.

**Installation diagram**

It should be installed like this; the back side(outdoor side) is lower so that the drained water can flow out smoothly.

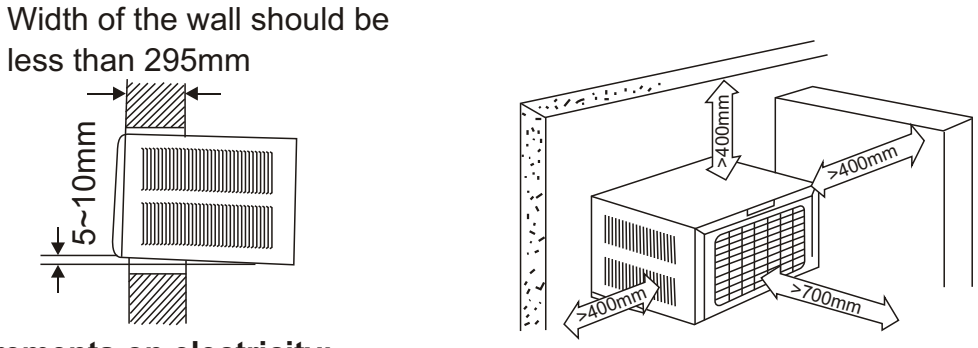


**Requirements on electricity:**

Be sure to use specific power circuit.

1.Applicable ambient temperature range:

| | | | |
|---|---|---|---|
| Cooling | Indoor | Maximum: D.B/W.B<br>Minimum: D.B/W.B | 32℃/23℃<br>18℃/14℃ |
| | Outdoor | Maximum: D.B./W.B.<br>Minimum: D.B | 43℃/26℃<br>15℃ |
| Heating | Indoor | Maximum: D.B<br>Minimum: D.B | 27℃<br>15℃ |
| | Outdoor | Maximum: D.B/W.B<br>Minimum: D.B/W.B | 24℃/18℃<br>-7℃/-8℃ |

※ If the ambient temp. is over 52℃, the air-conditioner can also operate normally. (For HW-18CC03, HW-24C03, HW-24CA03, HW-24C13, HW-24H03,AW242AQAAB, HW-18CE03, HW222AAAAA, HW222AAMAA)

2. If the supply cord is damaged, it must be replaced by the manufacturer or its service agent or a similar qualified person. An extend cord is not recommended.
3. The wiring method should be in line with local wiring standard.
4. After installation, the power plug should be easily reached.

## Installation instruction

### Selection of the installation position

1. Select position where the structure is firm.
2. Select position where the air inlet and outlet are smooth without obstacles.
3. Select position where the cooled air can be blown to every corner .
4. Select position where there's no direct sunlight. If the sunlight is inevitable. sunshading device is required.
5. Select position where the outdoor airflow will not influence the neighbors.
6. Select position where the drainage is smooth.
7. Select position where there's no dangerous gas or oil smoke nearby.
8. An extention cord is not recommened.

### Installation diagram

It should be installed like this; the back side(outdoor side) is lower so that the drained water can flow out smoothly.

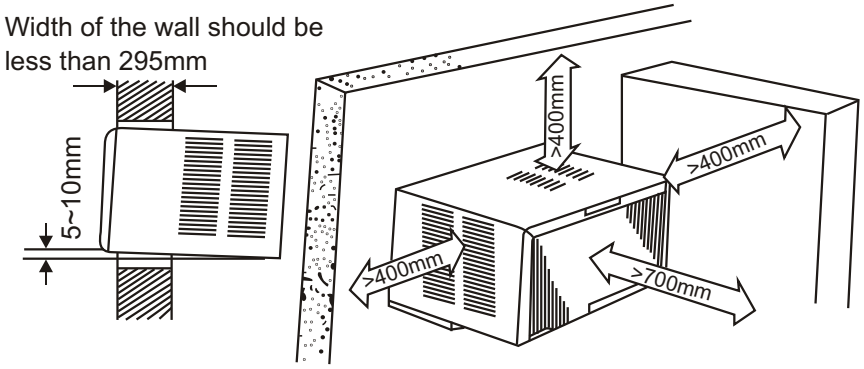


### Requirements on electricity

Be sure to use specific power circuit.

The enclosed accessories of the conditioner are:

| Name | Manual | Water outlet pipe | Drain elbow | Rubber lid | seal ring | Drain pan | Screw ∅4×6 |
|---|---|---|---|---|---|---|---|
| Figure | | For HW-10XXX HW-12XXX HW-18XXX | For HW-09XXX HW-07XXX HW-08XXX | | For HW-10XXX HW-12XXX HW-18XXX | For HW-07XXX HW-09XXX HW-08XXX | |
| Quantity | 1 | 1 | 1 | 1 | 1 | 1 | 4 |

## Before asking for service, check the following first.

| | Phenomenon | Cause or check points |
|---|---|---|
| Normal Performance inspection | The system does not restart immediately. 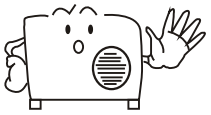 | ● When unit is stopped,it won't restart immediately until 3 minutes have elasped to protect the system.<br>● When the electric plug is pulled out and reinserted,the protection circuit will work for 3 minutes to protect the air conditioner. |
| | Noise is heard. | ● During unit operation or at stop,a swishing or gurgling noise may be heard.At first 2-3 minutes when unit starts this noise is more noticeable.(This noise is generated by refrigerant flowing in the systen.)<br>● During unit operation, a cracking noise may be heard. This noise is generated by the casing expanding or shrinking because of temperature changes.<br>● Should there be a big noise from air flow in unit operation, air filter may be too dirty. |
| | Smells are generated. | ● This is because the system circulates smells from the interior air such as the smell of furniture, cigarettes. |
| | Mist or steam are blown out. | ● During COOL or DRY operation,indoor unit may blow out mist.This is due to the sudden cooling of indoor air. |
| Double check | Does not work at all | ● Is electric plug inserted?<br>● Is there a power failure?<br>● Is fuse blown out? |
| | Poor cooling | ● Is the air filter dirty? Normally it should be cleaned every 15 days.<br>● Are there any obstacles in intet and outlet?<br>● Is temperature set correctly?<br>● Are there some doors or windows left open?<br>● Is there any direct sunlight through the window during the cooling operation?(Use curtain)<br>● Are there too much heat sources or too many people in the room during cooling operation? |

Application temp. range of air conditioner -7℃ ~43℃.

# Cooling capability curve

| Compressor description | QX-13,QX-13A | | |
|---|---|---|---|
| Power | 1PH 220V 50Hz | | |
| Running capacitor | 17.5μF | | |
| Refrigerator | R22 | Compressor cooling | Forled cooling |
| | | | |

| Mark | A | B | C | D | E |
|---|---|---|---|---|---|
| Condensing TEMP C | 40.5 | 45 | 50 | 54.4 | 60 |
| Return Gas TEMP C | 35 | 35 | 35 | 35 | 35 |
| Supper cooling TEMP C | 32.2 | 36.7 | 41.7 | 46.1 | 51.7 |
| Ambient TEMP C | 35 | 35 | 35 | 35 | 35 |
| | | | | | |

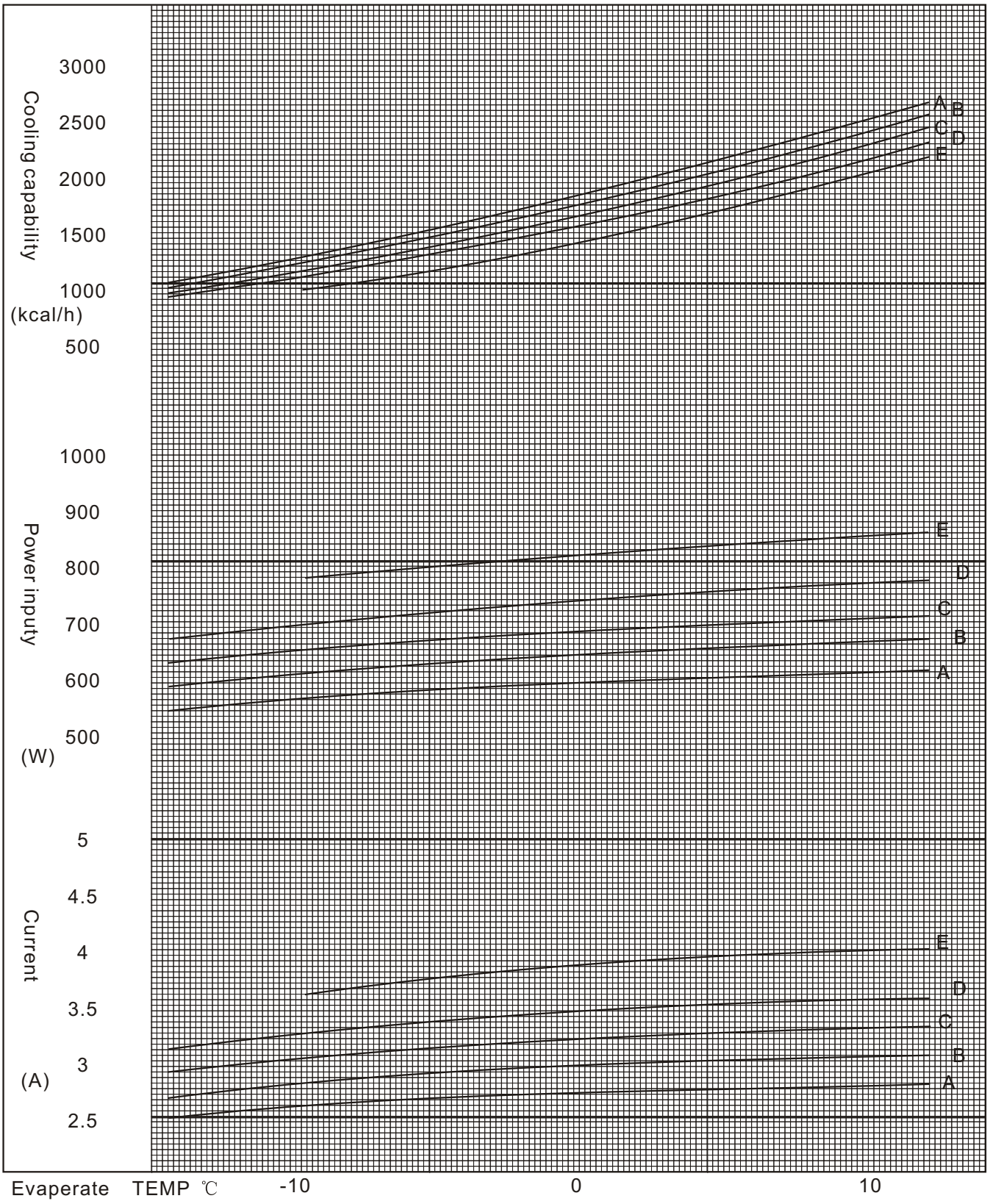

# Cooling capability curve

| Compressor description | QX-16,QX-16A | | |
|---|---|---|---|
| Power | 1PH 220V 50Hz | | |
| Running capacitor | 20μF | | |
| Refrigerator | R22 | Compressor cooling | Forled cooling |
| | | | |

| Mark | A | B | C | D | E |
|---|---|---|---|---|---|
| Condensing TEMP C | 40.5 | 45 | 50 | 54.4 | 60 |
| Return Gas TEMP C | 35 | 35 | 35 | 35 | 35 |
| Supper cooling TEMP C | 32.2 | 36.7 | 41.7 | 46.1 | 51.7 |
| Ambient TEMP C | 35 | 35 | 35 | 35 | 35 |
| | | | | | |

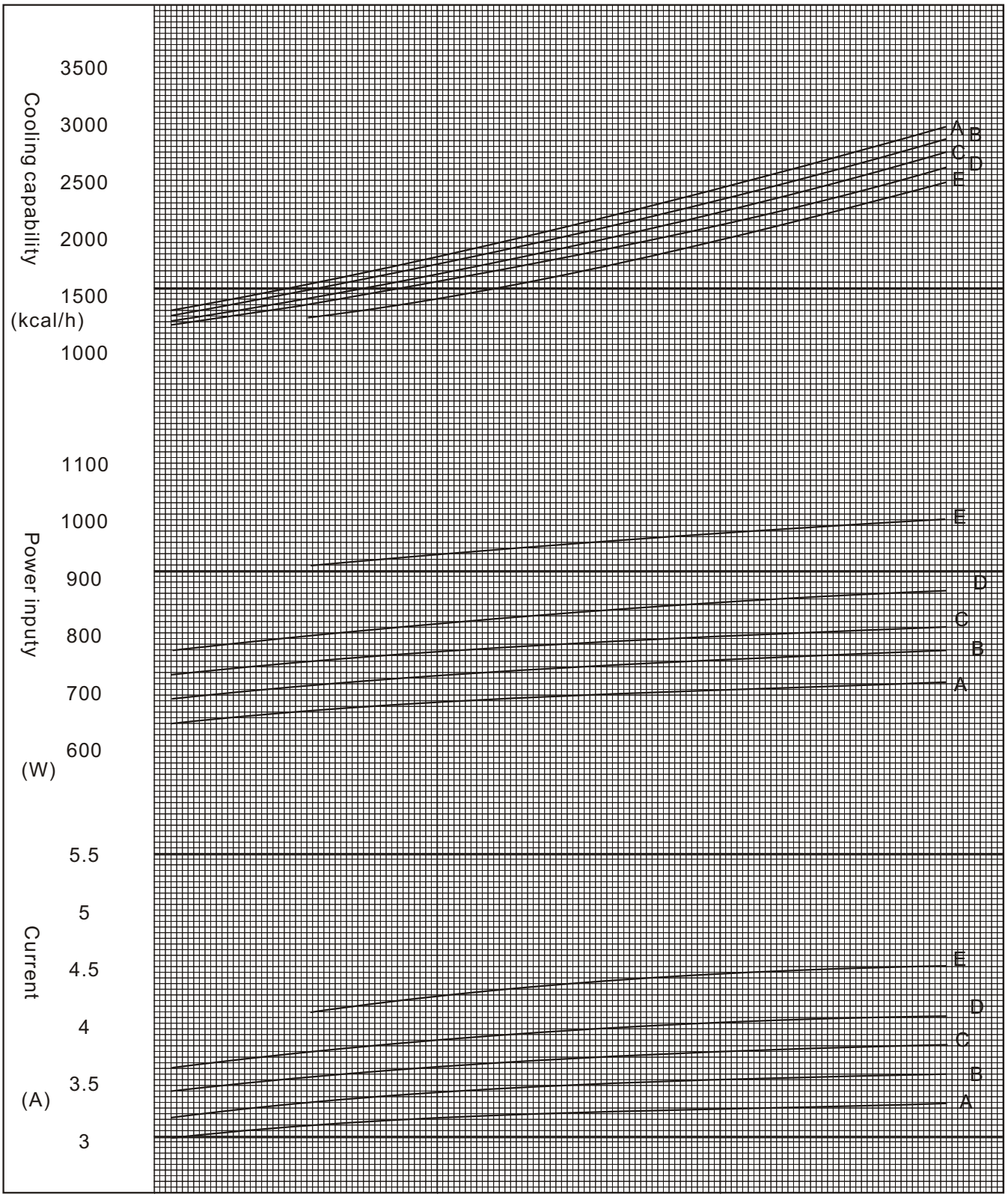

## Mechanical curve of motor

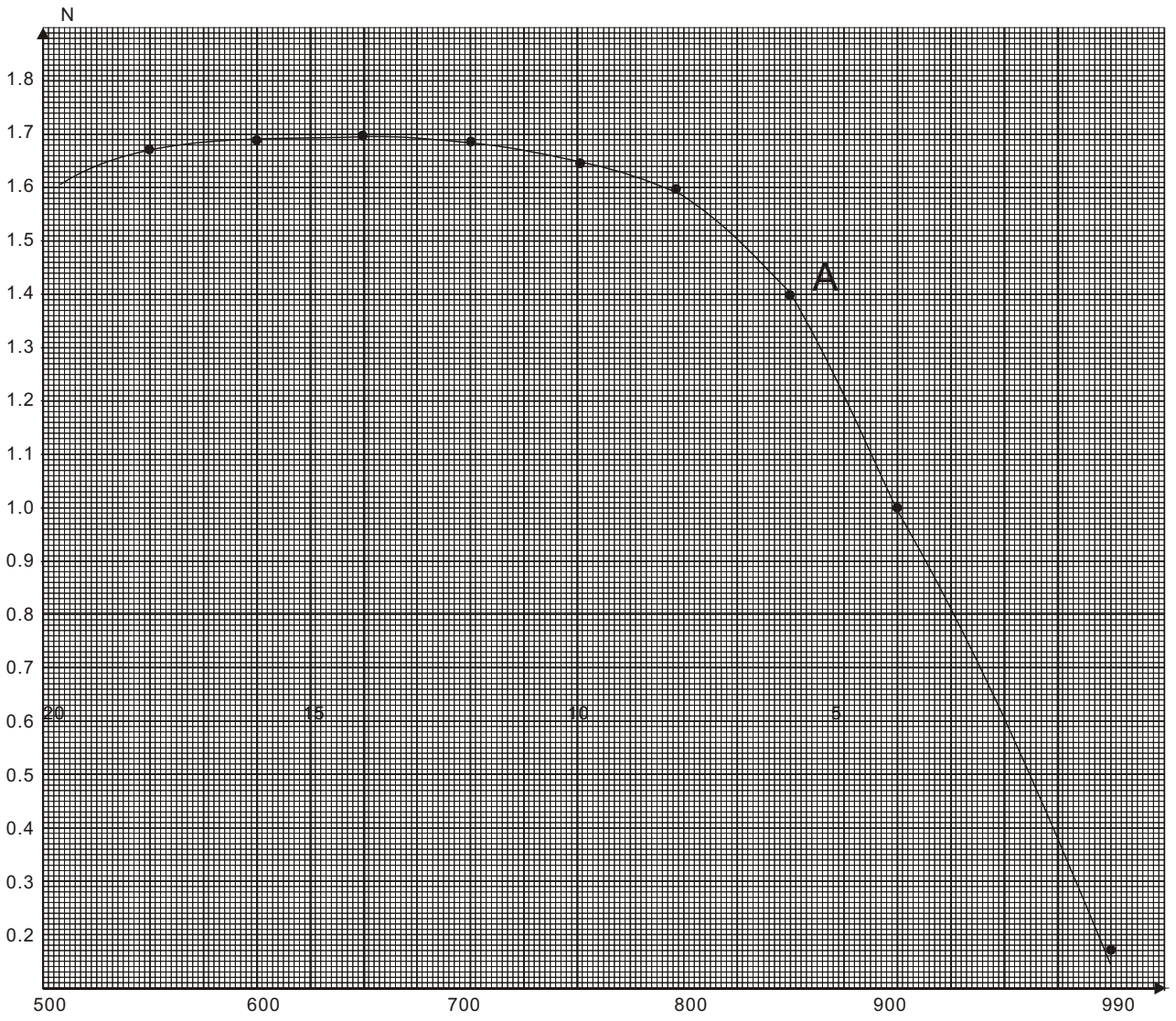

# Mechanical curve of motor

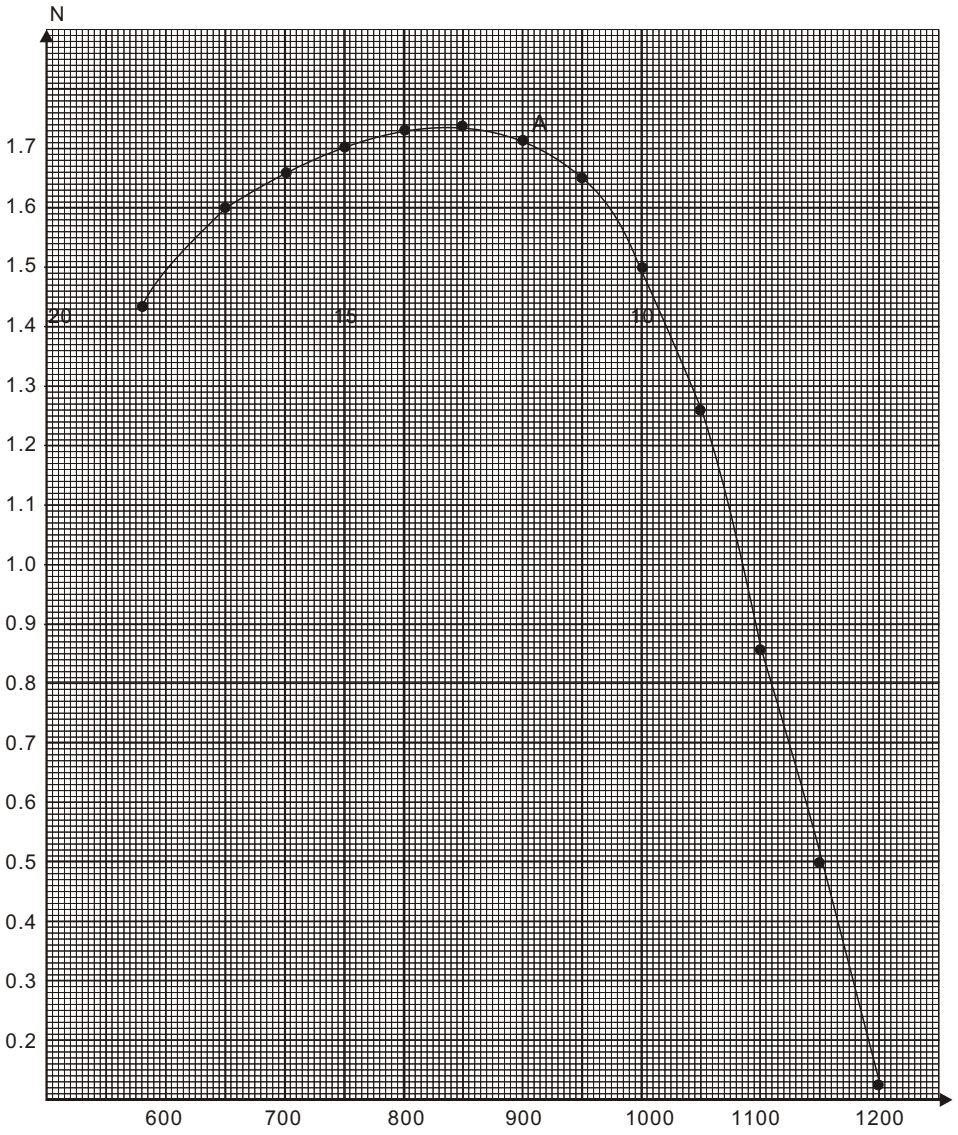

# Sincere Forever

Haier Group

Tel :86-532-8938356
Web site : http://www.haier.com